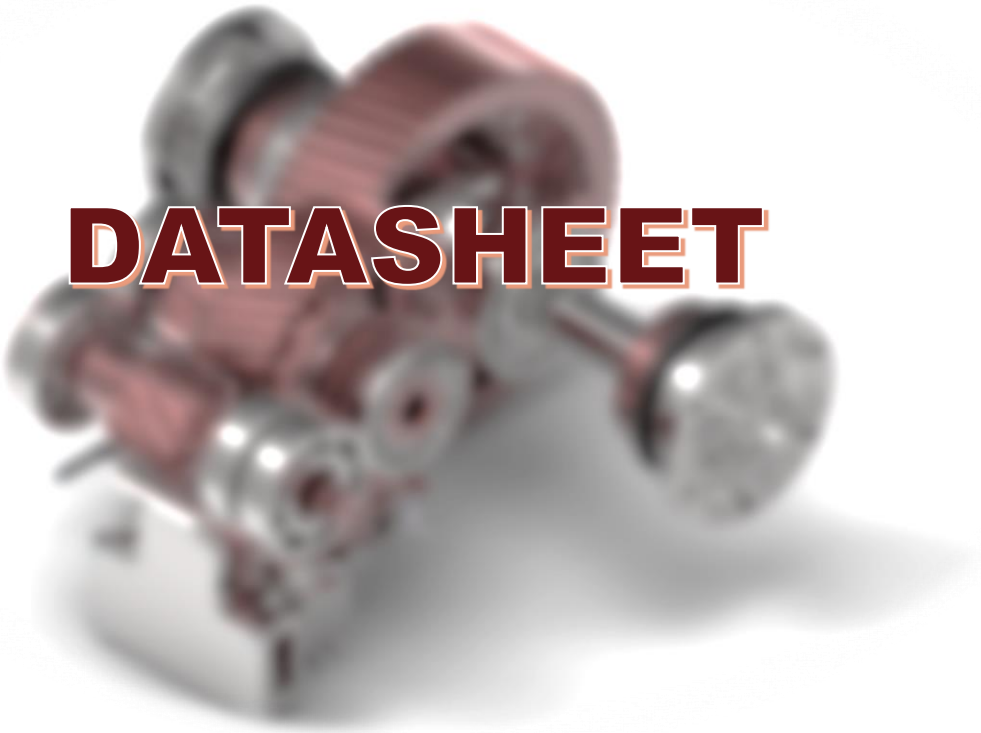

# DATASHEET

## SCNEWTON INC.

SCnewton's electric motors and electric drive modules portfolio offers a comprehensive solution in electrified powertrains; As a result of moving toward a cleaner and more environmentally friendly future, SCnewton offers a class of high power and high torque density e-drive platforms ranging from the module level to the integrated systems, from fractional kW up to 360 kW , and, from several thousand RPM to more than 65000 RPM.

# DATASHEET SUMMARY

1. STANDALONE TRACTION MOTOR
2. FRAMELESS TRACTION MOTOR
3. ZEBRA EDM MODEL-A
4. ZEBRA EDM MODEL-B
5. ZEBRA EDM MODEL-C
6. CHEETAH EDM MODEL-A
7. CHEETAH EDM MODEL-B
8. CHEETAH EDM MODEL-C
9. CHEETAH EDM MODEL-ALPHA
10. FRAMELESS BLDC
11. BLDC MOTOR
12. VR RESOLVERS

DRIVE FOR EXCELLENCE

SIX SIGMA

LEAN ENGINEERING

KAIZEN

PROCESS CONTROL

QUALITY CONTROL

TOLLGATE PROCESS

ADVANCE R&D

STANDARDS

SPECIFICATION

ENGINEERING MANAGEMENT

CONTROL MANAGEMENT

# TECHNOLOGY HIGHLIGHTS

- R95C95 reliability class, 20000 hours service life; various grade materials available for high / low voltage applications
- Superior protection provided by totally enclosed, high strength, zinc-plated steel housing or Anodized Aluminum housing
- Shaft configuration optional
- Machined aluminum end-cap for precise locating; round or square. Precision-tapped mounting holes provided to your specifications . Silicon steel laminations or high grade Hiperco
- Skewed rotors available for minimal cogging torque • Rotors are dynamically balanced to ISO G2.5
- Available with standard NEMA mountings and ISO
- Class 200 electrical insulation
- Permanently lubricated ball for high speed
- Park lock bldc driven
- Air breathr and oil release nut
- N-phase motors [3-phase, 5-phase,6-phase 9-phase]
- Gear-train [planetary/helical cylindrical]
- Open differential
- IP6K9K sealing systems
- Integrated cooling systems
- VR resolvers
- Ampseal LV terminals
- Custom HV terminals
- NTC / RTD thermal sensors
- Bearing ISO 492 CLASS 2,4,AND 6
- Insulation NEMA: B, H, 220 [C]
- Aluminum housing – Chem film
- Passivated Shafts and interfaces
- Annealed M19/Hipeco lamninations
- Corrosion resistance metals
- Chemical resistance seals

- HIGH GRADE MATERIALS
- HIGH RELIABILITY AND CONFIDENCE LEVEL
- LOW FAILURE RATE
- SCALABLE DESIGN
- HARMONIZED BOM
- LONG SERVICE LIFE
- Iso26262 ASLC,D FS
- IATF16949 QMS
- MODULAR DESIGN
- SCALABLE MODULES
- COST EFFECTIVE
- SHORT LEAD TIME
- UP TO DATE TECH
- HIGH POWER DENSITY
- HIGH FUNCTIONAL SAFETY
- COST EFFECTIVE
- MASS PRODUCTION
- ROBUST SUPPLY CHAIN
- CUSTOM SEALING CLASS
- CUSTOM VIBRATION CLASS
- ROHS COMPLIANCY OPTIONAL
- UL CERTIFICATION OPTIONAL

We offer a variety of standard sizes. If mechanical modifications are needed, custom options are available for your specific application. Our engineering team is prepared to discuss your application to help tailor a permanent magnet motor to fit your needs.

# STANDALONE TRACTION MOTORS

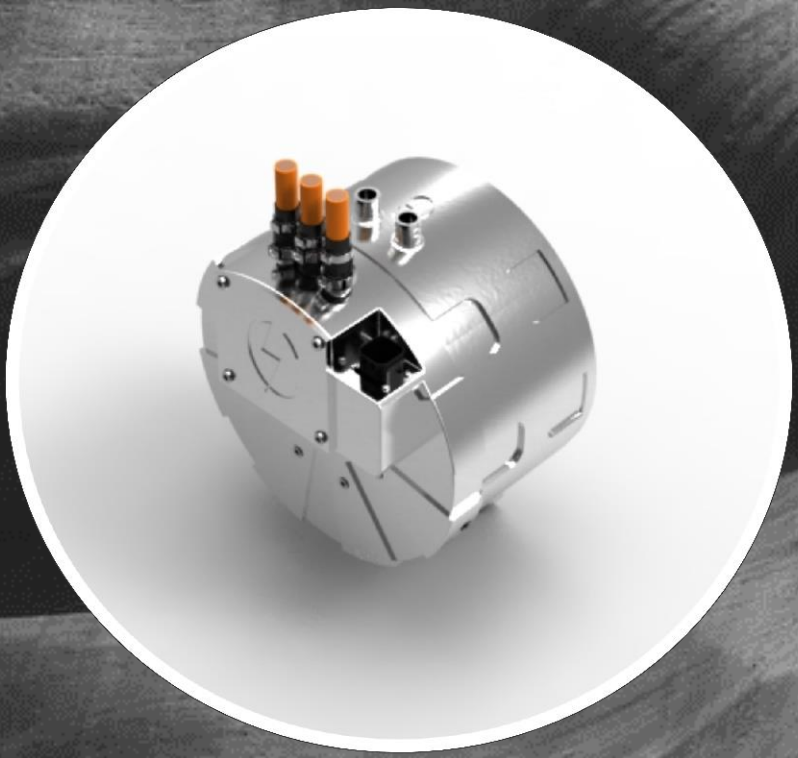

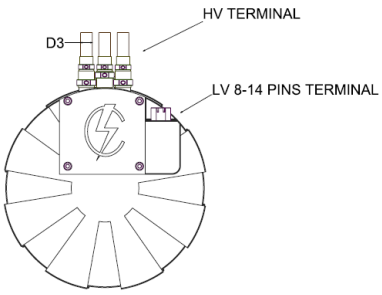


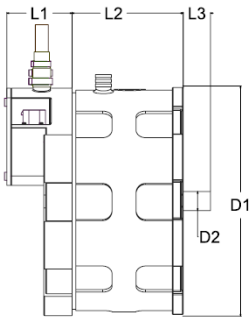


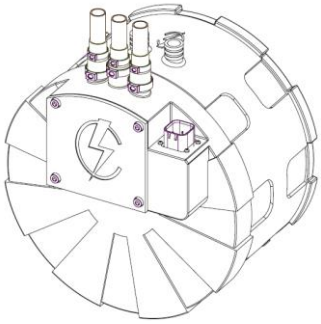

| CONTROL SIGNAL | NUMBER OF POLES | THERMAL SENSOR | HV TERMINAL | LV TERMINAL |
|---|---|---|---|---|
| VR REOLVER | 8 | NTC/RTD | SEALED 3-PHASE CABLE OR BUS BAR | AMPSEAL 8/12 POSITION |

| MODELS | VOLTAGE | CONTINOUS A-RMS | ACTIVE MOTOR OD | ACTIVE MOTOR LENGTH | CONTINOUS POWER @ MAX SPEED |
|---|---|---|---|---|---|
| STANDALONE TRACTION MOTOR | VDC | A-RMS | [mm] | [mm] | kW |
| M | 260-400/540-800 | 90-450 | 180-240 | 50-200 | 33-265 |

| ORDER | PART NUMBER | L1 [mm] | L2 [mm] | L3[mm] | D1 [mm] | D2 [mm] | D3 [mm] |
|---|---|---|---|---|---|---|---|
| 1 | M-400-125-180-90-31 | 68 | 147 | [5-60] | 212 | [20-35] | 10.3 |
| 2 | M-400-150-215-60-33 | 68 | 117 | [5-60] | 247 | [20-35] | 11.3 |
| 3 | M-400-125-215-60-35 | 68 | 117 | [5-60] | 247 | [20-35] | 10.3 |
| 4 | M-400-125-200-70-35 | 68 | 127 | [5-60] | 232 | [20-35] | 10.3 |
| 5 | M-400-150-220-60-41 | 69 | 117 | [5-60] | 252 | [20-35] | 11.3 |
| 6 | M-400-220-220-87-42 | 68 | 144 | [5-60] | 252 | [20-35] | 13.7 |
| 7 | M-400-175-220-68-42 | 68 | 125 | [5-60] | 252 | [20-35] | 12.2 |
| 8 | M-400-220-220-89-45 | 68 | 146 | [5-60] | 252 | [20-35] | 13.7 |
| 9 | M-400-175-215-63-45 | 68 | 120 | [5-60] | 247 | [20-35] | 12.2 |
| 10 | M-400-175-220-60-45 | 68 | 117 | [5-60] | 252 | [20-35] | 12.2 |
| 11 | M-400-220-220-100-46 | 68 | 157 | [5-60] | 252 | [20-35] | 13.7 |
| 12 | M-400-220-220-97-46 | 68 | 154 | [5-60] | 252 | [20-35] | 13.7 |
| 13 | M-400-220-220-90-46 | 68 | 147 | [5-60] | 252 | [20-35] | 13.7 |
| 14 | M-400-220-220-77-48 | 68 | 134 | [5-60] | 252 | [20-35] | 13.7 |
| 15 | M-400-220-220-81-48 | 68 | 138 | [5-60] | 252 | [20-35] | 13.7 |
| 16 | M-400-220-240-81-48 | 68 | 138 | [5-60] | 272 | [20-35] | 13.7 |
| 17 | M-400-220-240-88-50 | 68 | 145 | [5-60] | 272 | [20-35] | 13.7 |
| 18 | M-400-220-220-70-52 | 68 | 127 | [5-60] | 252 | [20-35] | 13.7 |
| 19 | M-400-220-210-60-52 | 68 | 117 | [5-60] | 242 | [20-35] | 13.7 |
| 20 | M-400-220-220-90-53 | 68 | 147 | [5-60] | 252 | [20-35] | 13.7 |
| 21 | M-400-220-220-79-56 | 68 | 136 | [5-60] | 252 | [20-35] | 13.7 |
| 22 | M-400-220-220-73-65 | 68 | 130 | [5-60] | 252 | [20-35] | 13.7 |
| 23 | M-800-90-215-93-45 | 68 | 150 | [5-60] | 247 | 20 | 8.7 |
| 24 | M-800-175-215-60-98 | 68 | 117 | [5-60] | 247 | 20 | 12.2 |
| 25 | M-800-175-215-63-109 | 68 | 120 | [5-60] | 247 | 20 | 12.2 |
| 26 | M-800-220-220-97-132 | 68 | 154 | [5-60] | 252 | 20 | 13.7 |
| 27 | M-800-220-220-77-135 | 68 | 134 | [5-60] | 252 | 20 | 13.7 |
| 28 | M-800-220-240-115-137 | 68 | 172 | [5-60] | 272 | 20 | 13.7 |
| 29 | M-800-220-220-77-137 | 68 | 134 | [5-60] | 252 | 20 | 13.7 |
| 30 | M-800-250-220-120-141 | 68 | 177 | [5-60] | 252 | 20 | 14.6 |
| 31 | M-800-275-240-115-146 | 68 | 172 | [5-60] | 272 | 20 | 15.3 |
| 32 | M-800-250-220-100-159 | 68 | 157 | [5-60] | 252 | 20 | 14.6 |
| 33 | M-800-300-220-140-168 | 68 | 197 | [5-60] | 252 | 20 | 15.9 |
| 34 | M-800-450-220-194-265 | 68 | 251 | [5-60] | 252 | 20 | 19.5 |

| PERFORMANCE DESCRIPTION | |
|---|---|
| P1 | MIN DC VOLTAGE FOR FULL PERFORMANCE [V] |
| P2 | PEAK 10 SEC. CURRENT [A] |
| P3 | MAX CONTINOUS CURRENT [A] |
| P4 | BASE SPEED |
| P5 | MAX SPEED |
| P6 | PEAK TORQUE [N.m] |
| P7 | MAX CONTINOUS TORQUE [N.m] @ MAX SPEED |
| P8 | PEAK POWER [KW] |
| P9 | PEAK POWER [KW] @ MAX SPEED |
| P10 | MAX CONTINOUS POWER [KW] @ MAX SPEED |

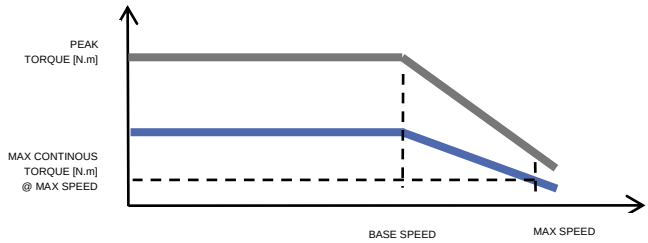


**PERFORMANCE TABLE**

| ORDER | PART # | P1 | P2 | P3 | P4 | P5 | P6 | P7 | P8 | P9 | P10 |
|---|---|---|---|---|---|---|---|---|---|---|---|
| 1 | M-400-125-180-90-31 | 280 | 250 | 125 | 5700 | 14000 | 103 | 21 | 61 | 61 | 31 |
| 2 | M-400-150-215-60-33 | 280 | 300 | 150 | 4600 | 14000 | 155 | 23 | 74 | 74 | 33 |
| 3 | M-400-125-215-60-35 | 280 | 250 | 125 | 4700 | 14000 | 125 | 24 | 61 | 61 | 35 |
| 4 | M-400-125-200-70-35 | 280 | 250 | 125 | 4700 | 14000 | 130 | 24 | 64 | 64 | 35 |
| 5 | M-400-150-220-60-41 | 280 | 300 | 150 | 4600 | 14000 | 155 | 28 | 74 | 74 | 41 |
| 6 | M-400-220-220-87-42 | 280 | 450 | 220 | 5000 | 13500 | 220 | 30 | 114 | 114 | 42 |
| 7 | M-400-175-220-68-42 | 280 | 350 | 175 | 4900 | 14000 | 170 | 29 | 87 | 87 | 42 |
| 8 | M-400-220-220-89-45 | 280 | 450 | 220 | 5500 | 13000 | 230 | 33 | 132 | 132 | 45 |
| 9 | M-400-175-215-63-45 | 280 | 350 | 175 | 4700 | 14000 | 170 | 31 | 83 | 83 | 45 |
| 10 | M-400-175-220-60-45 | 280 | 350 | 175 | 4600 | 14000 | 175 | 31 | 84 | 84 | 45 |
| 11 | M-400-220-220-100-46 | 280 | 450 | 220 | 5500 | 12000 | 220 | 37 | 126 | 126 | 46 |
| 12 | M-400-220-220-97-46 | 280 | 450 | 220 | 6000 | 13500 | 200 | 33 | 125 | 125 | 46 |
| 13 | M-400-220-220-90-46 | 280 | 450 | 220 | 3750 | 14000 | 200 | 33 | 78 | 78 | 48 |
| 14 | M-400-220-220-77-48 | 280 | 450 | 220 | 5000 | 14000 | 220 | 33 | 114 | 114 | 48 |
| 15 | M-400-220-220-81-48 | 280 | 450 | 220 | 5000 | 14000 | 220 | 33 | 114 | 114 | 48 |
| 16 | M-400-220-240-81-48 | 280 | 450 | 220 | 3000 | 12000 | 320 | 40 | 100 | 100 | 48 |
| 17 | M-400-220-240-88-50 | 280 | 450 | 220 | 3000 | 12000 | 320 | 40 | 100 | 100 | 50 |
| 18 | M-400-220-220-70-52 | 280 | 450 | 220 | 7000 | 12500 | 175 | 40 | 127 | 127 | 52 |
| 19 | M-400-220-210-60-52 | 280 | 450 | 220 | 8000 | 12500 | 145 | 41 | 121 | 121 | 53 |
| 20 | M-400-220-220-90-53 | 280 | 450 | 220 | 3600 | 14000 | 270 | 38 | 101 | 101 | 55 |
| 21 | M-400-220-220-79-56 | 330 | 450 | 220 | 9000 | 13500 | 190 | 40 | 178 | 178 | 56 |
| 22 | M-400-220-220-73-63 | 280 | 450 | 220 | 4300 | 14000 | 220 | 43 | 98 | 98 | 63 |
| 23 | M-800-90-215-93-45 | 540 | 180 | 90 | 4500 | 14000 | 180 | 31 | 84 | 64 | 45 |
| 24 | M-800-175-215-60-98 | 540 | 350 | 175 | 8200 | 17500 | 150 | 54 | 128 | 112 | 98 |
| 25 | M-800-175-215-63-109 | 540 | 350 | 175 | 9100 | 17500 | 170 | 60 | 161 | 135 | 109 |
| 26 | M-800-220-220-97-132 | 540 | 450 | 220 | 6000 | 17000 | 320 | 75 | 199 | 166 | 133 |
| 27 | M-800-220-220-77-135 | 540 | 450 | 220 | 6000 | 17500 | 320 | 74 | 200 | 235 | 135 |
| 28 | M-800-220-240-115-137 | 540 | 450 | 220 | 3500 | 17500 | 450 | 75 | 164 | 150 | 137 |
| 29 | M-800-220-220-77-137 | 540 | 450 | 220 | 6000 | 17500 | 320 | 75 | 200 | 168 | 137 |
| 30 | M-800-250-220-120-141 | 540 | 500 | 250 | 9600 | 17000 | 270 | 80 | 270 | 205 | 141 |
| 31 | M-800-275-240-115-146 | 540 | 550 | 275 | 3500 | 17500 | 510 | 80 | 186 | 175 | 146 |
| 32 | M-800-250-220-100-159 | 540 | 500 | 250 | 11700 | 17000 | 232 | 90 | 282 | 220 | 159 |
| 33 | M-800-300-220-140-168 | 540 | 600 | 300 | 8000 | 17000 | 385 | 95 | 320 | 244 | 168 |
| 34 | M-800-450-220-194-265 | 540 | 900 | 450 | 12000 | 17000 | 630 | 150 | 786 | 300 | 265 |

**KEY FEATURES:**

- 3-PHASE IPM DESIGN
- HIGH GRADE NEODYNIUM MAGNETS EH/UH
- HAIRPIN/STRANDED WIRE DESIGN
- IR&HIGH POT&SURGE TETING
- PARAMETRIC TEST DATA
- BEARING ISO 492 CLASS 2,4,AND 6
- SPLINE/KEY INTERFACE
- AL HOUSING –ANODIZED
- HIGH STRENGTH SHAFT –PASSIVATED
- ANNEALED M19/HIPERCO LAMINATION
- CORROSION RESISTANCE ACCESSORIES
- CHEMICAL RESISTANCE SEALS
- ROHS BOM COMPLIANCY
- HARMONIZED AND SCALABLE DESIGN
- PIGTAIL WITH HV LUGS/ OPTIONAL INTERLOCK HV CIRCUIT
- NTC / RTD FOR THERMAL PROTECTION
- VIBRATION CLASS V2-V5 PER CUSTOMER NEED
- VR RESOLVER
- COOLING SYSTEM NATURALLY COOLED/ WATER JACKET
- AMPSEAL LV TERMINALS

# FRAMELESS TRACTION MOTORS

| CONTROL SIGNAL | NUMBER OF POLES | THERMAL SENSOR | HV TERMINAL | LV TERMINAL |
|---|---|---|---|---|
| VR REOLVER | 8 | NTC/RTD | PIG-TAIL LEAD WIRE WITH LUG | PIG-TAIL LEAD WIRE |

| MODELS | VOLTAGE | CONTINOUS A-RMS | ACTIVE MOTOR OD | ACTIVE MOTOR LENGTH | CONTINOUS POWER @ MAX SPEED |
|---|---|---|---|---|---|
| FRAMELESS TRACTION MOTOR | VDC | A-RMS | [mm0 | [mm] | kW |
| FM | 260-400/540-800 | 90-450 | 180-240 | 50-200 | 33-265 |

| ORDER | PART NUMBER | OURTER DIAMETER [mm] | STACK LENGTH [mm] | MAX END-TO-END LENGTH [mm] |
|---|---|---|---|---|
| 1 | FM-400-125-180-90-31 | 180 | 90 | 147 |
| 2 | FM-400-150-215-60-33 | 215 | 60 | 117 |
| 3 | FM-400-125-215-60-35 | 215 | 60 | 117 |
| 4 | FM-400-125-200-70-35 | 200 | 70 | 127 |
| 5 | FM-400-150-220-60-41 | 220 | 60 | 117 |
| 6 | FM-400-220-220-87-42 | 220 | 87.5 | 144 |
| 7 | FM-400-175-220-68-42 | 210 | 68 | 125 |
| 8 | FM-400-220-220-89-45 | 220 | 89 | 146 |
| 9 | FM-400-175-215-63-45 | 215 | 63 | 120 |
| 10 | FM-400-175-220-60-45 | 220 | 60 | 117 |
| 11 | FM-400-220-220-100-46 | 220 | 100 | 157 |
| 12 | FM-400-220-220-97-46 | 220 | 97 | 154 |
| 13 | FM-400-220-220-90-48 | 220 | 90 | 147 |
| 14 | FM-400-220-220-77-48 | 220 | 77 | 134 |
| 15 | FM-400-220-220-81-48 | 220 | 81 | 138 |
| 16 | FM-400-220-240-81-48 | 240 | 81 | 138 |
| 17 | FM-400-220-240-88-50 | 240 | 88 | 145 |
| 18 | FM-400-220-220-70-52 | 220 | 70 | 127 |
| 19 | FM-400-220-210-60-53 | 210 | 60 | 117 |
| 20 | FM-400-220-220-90-55 | 220 | 90 | 147 |
| 21 | FM-400-220-220-79-56 | 220 | 79 | 136 |
| 22 | FM-400-220-220-73-63 | 220 | 73 | 130 |
| 23 | FM-800-90-215-93-45 | 215 | 63 | 150 |
| 24 | FM-800-175-215-60-98 | 215 | 60 | 117 |
| 25 | FM-800-175-215-63-109 | 215 | 63 | 120 |
| 26 | FM-800-220-220-97-132 | 220 | 97 | 154 |
| 27 | FM-800-220-220-77-135 | 220 | 77 | 134 |
| 28 | FM-800-220-240-115-137 | 240 | 115 | 172 |
| 29 | FM-800-220-220-77-137 | 220 | 77 | 134 |
| 30 | FM-800-250-220-120-141 | 220 | 120 | 177 |
| 31 | FM-800-275-240-115-146 | 240 | 115 | 172 |
| 32 | FM-800-250-220-100-159 | 220 | 100 | 157 |
| 33 | FM-800-300-220-140-168 | 220 | 140 | 197 |
| 34 | FM-800-450-220-194-265 | 220 | 194 | 251 |

| PERFORMANCE DESCRIPTION | |
|---|---|
| P1 | MIN DC VOLTAGE FOR FULL PERFORMANCE [V] |
| P2 | PEAK 10 SEC. CURRENT [A] |
| P3 | MAX CONTINOUS CURRENT [A] |
| P4 | BASE SPEED |
| P5 | MAX SPEED |
| P6 | PEAK TORQUE [N.m] |
| P7 | MAX CONTINOUS TORQUE [N.m] @ MAX SPEED |
| P8 | PEAK POWER [KW] |
| P9 | PEAK POWER [KW] @ MAX SPEED |
| P10 | MAX CONTINOUS POWER [KW] @ MAX SPEED |

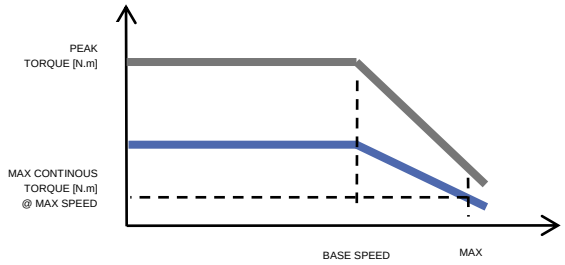


**ERFORMANCE CURVE**

| ORDER | PART NUMBER | P1 | P2 | P3 | P4 | P5 | P6 | P7 | P8 | P9 | P10 |
|---|---|---|---|---|---|---|---|---|---|---|---|
| 1 | FM-400-125-180-90-31 | 280 | 250 | 125 | 5700 | 14000 | 103 | 21 | 61 | 61 | 31 |
| 2 | FM-400-150-215-60-33 | 280 | 300 | 150 | 4600 | 14000 | 155 | 23 | 74 | 74 | 33 |
| 3 | FM-400-125-215-60-35 | 280 | 250 | 125 | 4700 | 14000 | 125 | 24 | 61 | 61 | 35 |
| 4 | FM-400-125-200-70-35 | 280 | 250 | 125 | 4700 | 14000 | 130 | 24 | 64 | 64 | 35 |
| 5 | FM-400-150-220-60-41 | 280 | 300 | 150 | 4600 | 14000 | 155 | 28 | 74 | 74 | 41 |
| 6 | FM-400-220-220-87-42 | 280 | 450 | 220 | 5000 | 13500 | 220 | 30 | 114 | 114 | 42 |
| 7 | FM-400-175-220-68-42 | 280 | 350 | 175 | 4900 | 14000 | 170 | 29 | 87 | 87 | 42 |
| 8 | FM-400-220-220-89-45 | 280 | 450 | 220 | 5500 | 13000 | 230 | 33 | 132 | 132 | 45 |
| 9 | FM-400-175-215-63-45 | 280 | 350 | 175 | 4700 | 14000 | 170 | 31 | 83 | 83 | 45 |
| 10 | FM-400-175-220-60-45 | 280 | 350 | 175 | 4600 | 14000 | 175 | 31 | 84 | 84 | 45 |
| 11 | FM-400-220-220-100-46 | 280 | 450 | 220 | 5500 | 12000 | 220 | 37 | 126 | 126 | 46 |
| 12 | FM-400-220-220-97-46 | 280 | 450 | 220 | 6000 | 13500 | 200 | 33 | 125 | 125 | 46 |
| 13 | FM-400-220-220-90-48 | 280 | 450 | 220 | 3750 | 14000 | 200 | 33 | 78 | 78 | 48 |
| 14 | FM-400-220-220-77-48 | 280 | 450 | 220 | 5000 | 14000 | 220 | 33 | 114 | 114 | 48 |
| 15 | FM-400-220-220-81-48 | 280 | 450 | 220 | 5000 | 14000 | 220 | 33 | 114 | 114 | 48 |
| 16 | FM-400-220-240-81-48 | 280 | 450 | 220 | 3000 | 12000 | 320 | 40 | 100 | 100 | 50 |
| 17 | FM-400-220-240-88-50 | 280 | 450 | 220 | 3000 | 12000 | 320 | 40 | 100 | 100 | 50 |
| 18 | FM-400-220-220-70-52 | 280 | 450 | 220 | 7000 | 12500 | 175 | 40 | 127 | 127 | 52 |
| 19 | FM-400-220-210-60-53 | 280 | 450 | 220 | 8000 | 12500 | 145 | 41 | 121 | 121 | 53 |
| 20 | FM-400-220-220-90-55 | 280 | 450 | 220 | 3600 | 14000 | 270 | 38 | 101 | 101 | 55 |
| 21 | FM-400-220-220-79-56 | 330 | 450 | 220 | 9000 | 13500 | 190 | 40 | 178 | 178 | 56 |
| 22 | FM-400-220-220-73-63 | 280 | 450 | 220 | 4300 | 14000 | 220 | 43 | 98 | 98 | 63 |
| 23 | FM-800-90-215-93-45 | 540 | 180 | 90 | 4500 | 14000 | 180 | 31 | 84 | 64 | 45 |
| 24 | FM-800-175-215-60-98 | 540 | 350 | 175 | 8200 | 17500 | 150 | 54 | 128 | 112 | 98 |
| 25 | FM-800-175-215-63-109 | 540 | 350 | 175 | 9100 | 17500 | 170 | 60 | 161 | 135 | 109 |
| 26 | FM-800-220-220-97-132 | 540 | 450 | 220 | 6000 | 17000 | 320 | 75 | 199.68 | 166 | 133 |
| 27 | FM-800-220-220-77-135 | 540 | 450 | 220 | 6000 | 17500 | 320 | 74 | 200 | 235 | 135 |
| 28 | FM-800-220-240-115-137 | 540 | 450 | 220 | 3500 | 17500 | 450 | 75 | 164 | 150 | 137 |
| 29 | FM-800-220-220-77-137 | 540 | 450 | 220 | 6000 | 17500 | 320 | 75 | 200 | 168 | 137 |
| 30 | FM-800-250-220-120-141 | 540 | 500 | 250 | 9600 | 17000 | 270 | 80 | 270 | 205 | 141 |
| 31 | FM-800-275-240-115-146 | 540 | 550 | 275 | 3500 | 17500 | 510 | 80 | 186 | 175 | 146 |
| 32 | FM-800-250-220-100-159 | 540 | 500 | 250 | 11700 | 17000 | 232 | 90 | 282 | 220 | 159 |
| 33 | FM-800-300-220-140-168 | 540 | 600 | 300 | 8000 | 17000 | 385 | 95 | 320 | 244 | 168 |
| 34 | FM-800-450-220-194-265 | 540 | 900 | 450 | 12000 | 17000 | 630 | 150 | 786 | 300 | 265 |

**KEY FEATURES:**

- 3-PHASE IPM DESIGN
- HIGH GRADE NEODYNIUM MAGNETS EH/UH
- HAIRPIN/STRANDED WIRE DESIGN
- IR&HIGH POT&SURGE TETING
- PARAMETRIC TEST DATA
- BEARING ISO 492 CLASS 2,4,AND 6
- SPLINE/KEY INTERFACE
- AL HOUSING –ANODIZED
- HIGH STRENGTH SHAFT –PASSIVATED
- ANNEALED M19/HIPERCO LAMINATION
- CORROSION RESISTANCE ACCESSORIES
- CHEMICAL RESISTANCE SEALS
- ROHS BOM COMPLIANCY
- HARMONIZED AND SCALABLE DESIGN
- PIGTAIL WITH HV LUGS
- NTC / RTD FOR THERMAL PROTECTION
- VIBRATION CLASS V2-V5 PER CUSTOMER NEED
- VR RESOLVER

# INTEGRATED MOTOR & Z-PORT

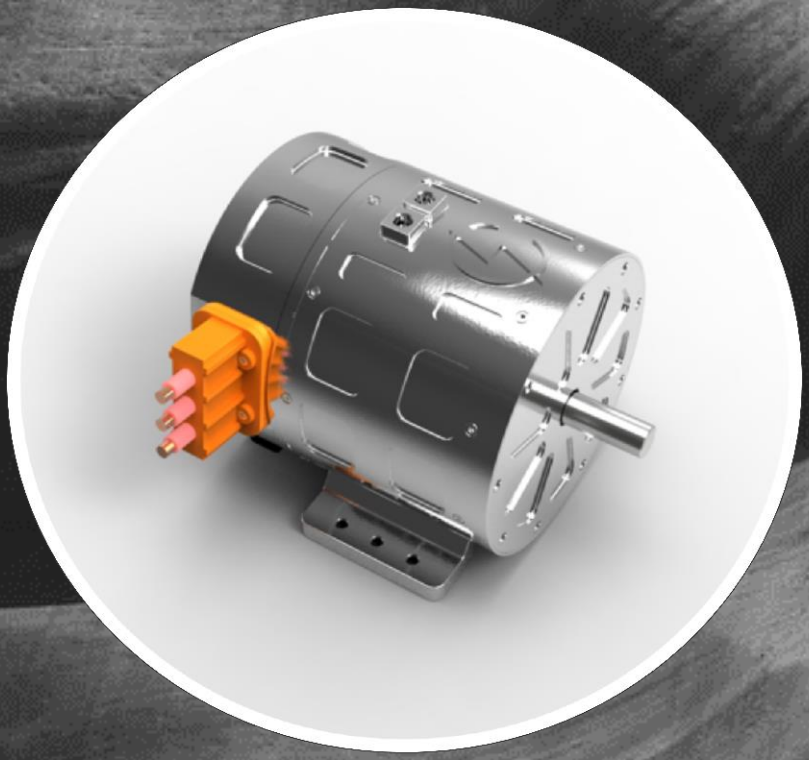

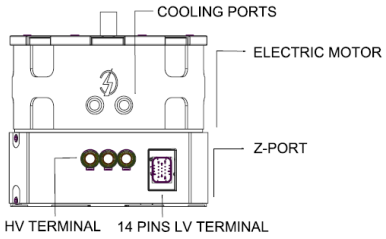


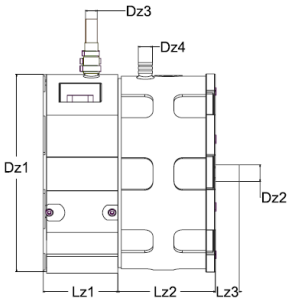


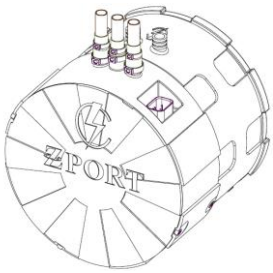


| CONTROL SIGNAL | NUMBER OF POLES | THERMAL SENSOR | HV TERMINAL | LV TERMINAL |
|---|---|---|---|---|
| VR REOLVER | 8 | NTC/RTD | SEALED 3-PHASE CABLE OR BUS BAR | AMPSEAL 14 POSITION |

| MODELS | VOLTAGE | CONTINOUS CURRENT | MOTOR OUTER DIAMETER | MOTOR ACTIVE LENGTH | CONTINOUS POWER@ MAX SPEED |
|---|---|---|---|---|---|
| INTEGRATED MOTOR&Z-PORT | [VDC] | [A-RMS] | [mm] | [mm] | kW |
| MZ | 150-400/450-800 | 90-450 | 180-240 | 50-200 | 33-265 |

| ORDER | PART NUMBER | LZ1 [mm] | LZ2 [mm] | LZ3[mm] | DZ1[mm] | DZ2 [mm] | DZ3 [mm] | DZ4 [mm] |
|---|---|---|---|---|---|---|---|---|
| 1 | MZ-400-125-180-90-31 | 90 | 147 | [5-60] | 212 | [20-35] | 10.3 | [15-25] |
| 2 | MZ-400-150-215-60-33 | 90 | 117 | [5-60] | 247 | [20-35] | 11.3 | [15-25] |
| 3 | MZ-400-125-215-60-35 | 90 | 117 | [5-60] | 247 | [20-35] | 10.3 | [15-25] |
| 4 | MZ-400-125-200-70-35 | 90 | 127 | [5-60] | 232 | [20-35] | 10.3 | [15-25] |
| 5 | MZ-400-150-220-60-41 | 90 | 117 | [5-60] | 252 | [20-35] | 11.3 | [15-25] |
| 6 | MZ-400-220-220-87-42 | 90 | 144 | [5-60] | 252 | [20-35] | 13.7 | [15-25] |
| 7 | MZ-400-175-220-68-42 | 90 | 125 | [5-60] | 252 | [20-35] | 12.2 | [15-25] |
| 8 | MZ-400-220-220-89-45 | 90 | 146 | [5-60] | 252 | [20-35] | 13.7 | [15-25] |
| 9 | MZ-400-175-215-63-45 | 90 | 120 | [5-60] | 247 | [20-35] | 12.2 | [15-25] |
| 10 | MZ-400-175-220-60-45 | 90 | 117 | [5-60] | 252 | [20-35] | 12.2 | [15-25] |
| 11 | MZ-400-220-220-100-46 | 90 | 157 | [5-60] | 252 | [20-35] | 13.7 | [15-25] |
| 12 | MZ-400-220-220-97-46 | 90 | 154 | [5-60] | 252 | [20-35] | 13.7 | [15-25] |
| 13 | MZ-400-220-220-90-46 | 90 | 147 | [5-60] | 252 | [20-35] | 13.7 | [15-25] |
| 14 | MZ-400-220-220-77-48 | 90 | 134 | [5-60] | 252 | [20-35] | 13.7 | [15-25] |
| 15 | MZ-400-220-220-81-48 | 90 | 138 | [5-60] | 252 | [20-35] | 13.7 | [15-25] |
| 16 | MZ-400-220-240-81-50 | 90 | 138 | [5-60] | 272 | [20-35] | 13.7 | [15-25] |
| 17 | MZ-400-220-240-88-50 | 90 | 145 | [5-60] | 272 | [20-35] | 13.7 | [15-25] |
| 18 | MZ-400-220-220-70-52 | 90 | 127 | [5-60] | 252 | [20-35] | 13.7 | [15-25] |
| 19 | MZ-400-220-210-60-53 | 90 | 117 | [5-60] | 242 | [20-35] | 13.7 | [15-25] |
| 20 | MZ-400-220-220-90-55 | 90 | 147 | [5-60] | 252 | [20-35] | 13.7 | [15-25] |
| 21 | MZ-400-220-220-79-56 | 90 | 136 | [5-60] | 252 | [20-35] | 13.7 | [15-25] |
| 22 | MZ-400-220-220-73-63 | 90 | 130 | [5-60] | 252 | [20-35] | 13.7 | [15-25] |
| 23 | MZ-800-90-215-93-45 | 90 | 150 | [5-60] | 247 | 20 | 8.7 | [15-25] |
| 24 | MZ-800-175-215-60-98 | 90 | 117 | [5-60] | 247 | 20 | 12.2 | [15-25] |
| 25 | MZ-800-175-215-63-109 | 90 | 120 | [5-60] | 247 | 20 | 12.2 | [15-25] |
| 26 | MZ-800-220-220-97-132 | 90 | 154 | [5-60] | 252 | 20 | 13.7 | [15-25] |
| 27 | MZ-800-220-220-77-135 | 90 | 134 | [5-60] | 252 | 20 | 13.7 | [15-25] |
| 28 | MZ-800-220-240-115-137 | 90 | 172 | [5-60] | 272 | 20 | 13.7 | [15-25] |
| 29 | MZ-800-220-220-77-137 | 90 | 134 | [5-60] | 252 | 20 | 13.7 | [15-25] |
| 30 | MZ-800-250-220-120-141 | 90 | 177 | [5-60] | 252 | 20 | 14.6 | [15-25] |
| 31 | MZ-800-275-240-115-146 | 90 | 172 | [5-60] | 272 | 20 | 15.3 | [15-25] |
| 32 | MZ-800-250-220-100-159 | 90 | 157 | [5-60] | 252 | 20 | 14.6 | [15-25] |
| 33 | MZ-800-300-220-140-168 | 90 | 197 | [5-60] | 252 | 20 | 15.9 | [15-25] |
| 34 | MZ-800-450-220-194-265 | 90 | 251 | [5-60] | 252 | 20 | 19.5 | [15-25] |

| PERFORMANCE DESCRIPTION | |
|---|---|
| P1 | MIN DC VOLTAGE FOR FULL PERFORMANCE [V] |
| P2 | PEAK 10 SEC. CURRENT [A] |
| P3 | MAX CONTINOUS CURRENT [A] |
| P4 | BASE SPEED-ZPORT HIGH |
| P5 | BASE SPEED-ZPORT LOW |
| P6 | MAX SPEED ZPORT -LOW |
| P7 | PEAK TORQUE [N.m]-ZPORT LOW |
| P8 | PEAK TORQUE [N.m]-ZPORT HIGH |
| P9 | MAX CONTINOUS TORQUE [N.m] @ MAX SPEED-ZPORT LOW |
| P10 | PEAK POWER [KW]-ZPORT LOW |
| P11 | PEAK POWER [KW]-ZPORT HIGH |
| P12 | PEAK 10 SEC. POWER [KW] @ MAX SPEED-ZPORT LOW |
| P13 | MAX CONTINOUS POWER [KW] @ MAX SPEED-ZPORT LOW |

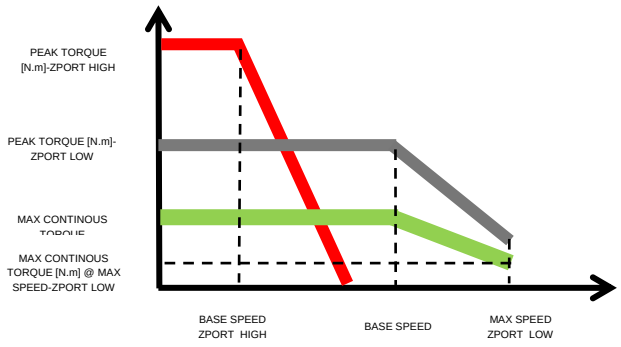


**PERFORMANCE TABLE @ MOTOR OUTPUT**

| ORDER | PART NUMBER | P1 | P2 | P3 | P4 | P5 | P6 | P7 | P8 | P9 | P10 | P11 | P12 | P13 |
|---|---|---|---|---|---|---|---|---|---|---|---|---|---|---|
| 1 | MZ-400-125-180-90-31 | 280 | 250 | 125 | 2478 | 5700 | 14000 | 103 | 180 | 21 | 61 | 46 | 61 | 31 |
| 2 | MZ-400-150-215-60-33 | 280 | 300 | 150 | 2000 | 4600 | 14000 | 155 | 271 | 23 | 74 | 56 | 74 | 33 |
| 3 | MZ-400-125-215-60-35 | 280 | 250 | 125 | 2043 | 4700 | 14000 | 125 | 219 | 24 | 61 | 46 | 61 | 35 |
| 4 | MZ-400-125-200-70-35 | 280 | 250 | 125 | 2043 | 4700 | 14000 | 130 | 228 | 24 | 64 | 48 | 64 | 35 |
| 5 | MZ-400-150-220-60-41 | 280 | 300 | 150 | 2000 | 4600 | 14000 | 155 | 271 | 28 | 74 | 56 | 74 | 41 |
| 6 | MZ-400-220-220-87-42 | 280 | 450 | 220 | 2174 | 5000 | 13500 | 220 | 385 | 30 | 114 | 87 | 114 | 42 |
| 7 | MZ-400-175-220-68-42 | 280 | 350 | 175 | 2130 | 4900 | 14000 | 170 | 298 | 29 | 87 | 66 | 87 | 42 |
| 8 | MZ-400-220-220-89-45 | 280 | 450 | 220 | 2391 | 5500 | 13000 | 230 | 403 | 33 | 132 | 100 | 132 | 45 |
| 9 | MZ-400-175-215-63-45 | 280 | 350 | 175 | 2043 | 4700 | 14000 | 170 | 298 | 31 | 83 | 63 | 83 | 45 |
| 10 | MZ-400-175-220-60-45 | 280 | 350 | 175 | 2000 | 4600 | 14000 | 175 | 306 | 31 | 84 | 64 | 84 | 45 |
| 11 | MZ-400-220-220-100-46 | 280 | 450 | 220 | 2391 | 5500 | 12000 | 220 | 385 | 37 | 126 | 96 | 126 | 46 |
| 12 | MZ-400-220-220-97-46 | 280 | 450 | 220 | 2609 | 6000 | 13500 | 200 | 350 | 33 | 125 | 95 | 125 | 46 |
| 13 | MZ-400-220-220-90-46 | 280 | 450 | 220 | 1630 | 3750 | 14000 | 200 | 350 | 33 | 78 | 59 | 78 | 48 |
| 14 | MZ-400-220-220-77-48 | 280 | 450 | 220 | 2174 | 5000 | 14000 | 220 | 385 | 33 | 114 | 87 | 114 | 48 |
| 15 | MZ-400-220-220-81-48 | 280 | 450 | 220 | 2174 | 5000 | 14000 | 220 | 385 | 33 | 114 | 87 | 114 | 48 |
| 16 | MZ-400-220-240-81-50 | 280 | 450 | 220 | 1304 | 3000 | 12000 | 320 | 560 | 40 | 100 | 76 | 100 | 50 |
| 17 | MZ-400-220-240-88-50 | 280 | 450 | 220 | 1304 | 3000 | 12000 | 320 | 560 | 40 | 100 | 76 | 100 | 50 |
| 18 | MZ-400-220-220-70-52 | 280 | 450 | 220 | 3000 | 7000 | 12500 | 175 | 320 | 40 | 127 | 100 | 127 | 52 |
| 19 | MZ-400-220-210-60-53 | 280 | 450 | 220 | 4000 | 8000 | 12500 | 145 | 250 | 41 | 121 | 104 | 121 | 53 |
| 20 | MZ-400-220-220-90-55 | 280 | 450 | 220 | 1565 | 3600 | 14000 | 270 | 473 | 38 | 101 | 77 | 101 | 55 |
| 21 | MZ-400-220-220-79-56 | 330 | 450 | 220 | 3100 | 9000 | 13500 | 190 | 350 | 40 | 178 | 113 | 178 | 56 |
| 22 | MZ-400-220-220-73-63 | 280 | 450 | 220 | 1870 | 4300 | 14000 | 220 | 385 | 43 | 98 | 75 | 98 | 63 |
| 23 | MZ-800-90-215-93-45 | 540 | 180 | 90 | 1957 | 4500 | 14000 | 180 | 306 | 31 | 84 | 62 | 64 | 45 |
| 24 | MZ-800-175-215-60-98 | 540 | 350 | 175 | 3565 | 8200 | 17500 | 150 | 255 | 54 | 128 | 95 | 112 | 98 |
| 25 | MZ-800-175-215-63-109 | 540 | 350 | 175 | 3957 | 9100 | 17500 | 170 | 289 | 60 | 161 | 119 | 135 | 109 |
| 26 | MZ-800-220-220-97-132 | 540 | 450 | 220 | 3000 | 6000 | 17000 | 320 | 450 | 75 | 199 | 140 | 166 | 133 |
| 27 | MZ-800-220-220-77-135 | 540 | 450 | 220 | 2609 | 6000 | 17500 | 320 | 544 | 74 | 200 | 148 | 235 | 135 |
| 28 | MZ-800-220-240-115-137 | 540 | 450 | 220 | 1522 | 3500 | 17500 | 450 | 765 | 75 | 164 | 121 | 150 | 137 |
| 29 | MZ-800-220-220-77-137 | 540 | 450 | 220 | 2609 | 6000 | 17500 | 320 | 544 | 75 | 200 | 148 | 168 | 137 |
| 30 | MZ-800-250-220-120-141 | 540 | 500 | 250 | 3700 | 9600 | 17000 | 270 | 520 | 80 | 270 | 200 | 205 | 141 |
| 31 | MZ-800-275-240-115-146 | 540 | 550 | 275 | 1522 | 3500 | 17500 | 510 | 867 | 80 | 186 | 137 | 175 | 146 |
| 32 | MZ-800-250-220-100-159 | 540 | 500 | 250 | 4400 | 11700 | 17000 | 232 | 433 | 90 | 282 | 198 | 220 | 159 |
| 33 | MZ-800-300-220-140-168 | 540 | 600 | 300 | 3700 | 8000 | 17000 | 385 | 780 | 95 | 320 | 300 | 244 | 168 |
| 34 | MZ-800-450-220-194-265 | 540 | 900 | 450 | 6000 | 12000 | 17000 | 630 | 900 | 150 | 786 | 562 | 300 | 265 |

**KEY FEATURES:**

- 400/800 V INTEGRATED Z-PORT ASSEMBLY.
- 3-PHASE IPM DESIGN
- HIGH GRADE NEODYNIUM MAGNETS EH/UH
- HAIRPIN/STRANDED WIRE DESIGN
- IR&HIGH POT&SURGE TETING
- PARAMETRIC TEST DATA
- BEARING ISO 492 CLASS 2,4,AND 6
- SPLINE/KEY INTERFACE
- AL HOUSING –ANODIZED
- HIGH STRENGTH SHAFT –PASSIVATED
- ANNEALED M19/HIPERCO LAMINATION
- CORROSION RESISTANCE ACCESSORIES
- CHEMICAL RESISTANCE SEALS
- ROHS BOM COMPLIANCY
- HARMONIZED AND SCALABLE DESIGN
- PIGTAIL WITH HV LUGS/ OPTIONAL INTERLOCK HV CIRCUIT
- NTC / RTD FOR THERMAL PROTECTION
- VIBRATION CLASS V2-V5 PER CUSTOMER NEED
- VR RESOLVER
- COOLING SYSTEM NATURALLY COOLED/ WATER JACKET
- 14 PIN AMPSEAL LV TERMINALS

# ZEBRA EDM
# MODEL-A

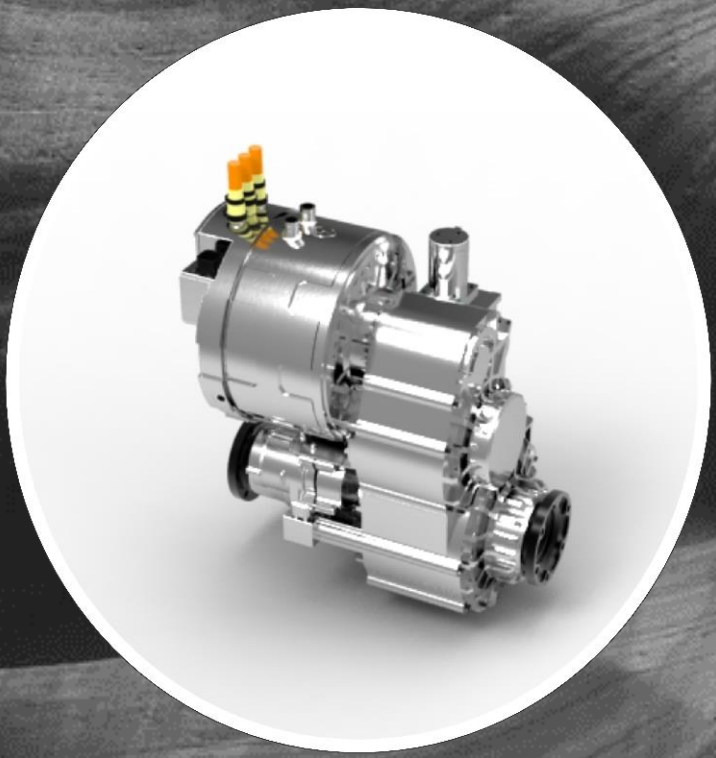

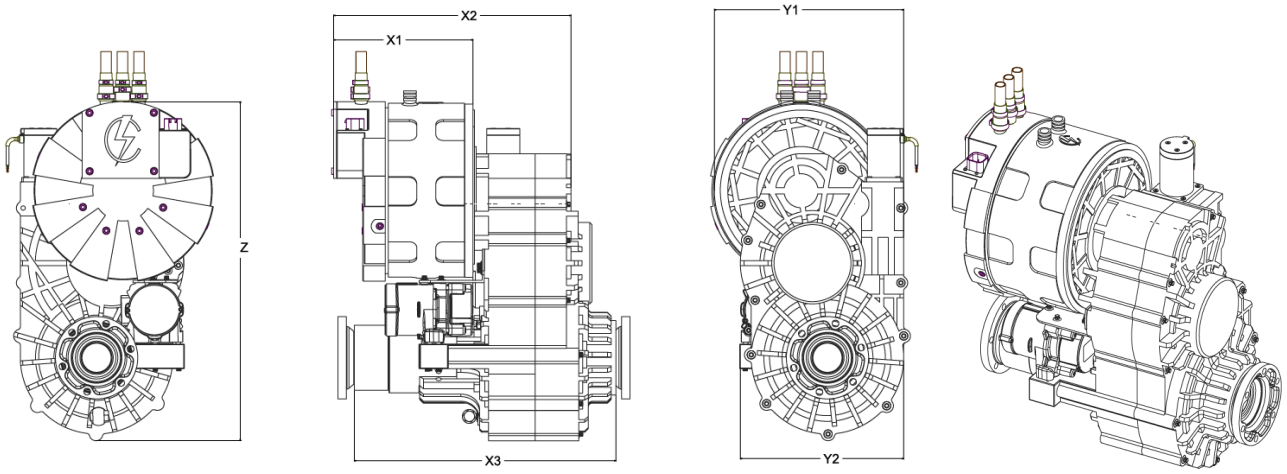


| MODELS | VOLTAGE | CONTINOUS CURRENT | ACTIVE MOTOR OD | ACTIVE MOTOR LENGTH | CONTINOUS POWER @ MAX SPEED |
|---|---|---|---|---|---|
| ZEBRA EDM MODEL-A | [VDC] | [A-RMS] | [mm] | [mm] | kW |
| EAM | 260-400/540-800 | 90-450 | 180-240 | 50-200 | 33-265 |

| ORDER | PART NUMBER | L1 [mm] | L2 [mm] | X1 [mm] | X2[mm] | X3[mm] | Y1[mm] | Y2[mm] | Z[mm] | D1 [mm] |
|---|---|---|---|---|---|---|---|---|---|---|
| 1 | EAM-400-125-180-90-31 | 68 | 149 | 217 | 365 | 385 | 224 | 218 | 418 | 212 |
| 2 | EAM-400-150-215-60-33 | 68 | 119 | 187 | 335 | 355 | 259 | 218 | 453 | 247 |
| 3 | EAM-400-125-215-60-35 | 68 | 119 | 187 | 335 | 355 | 259 | 218 | 453 | 247 |
| 4 | EAM-400-125-200-70-35 | 68 | 129 | 197 | 345 | 365 | 244 | 218 | 438 | 232 |
| 5 | EAM-400-150-220-60-41 | 69 | 119 | 188 | 336 | 356 | 264 | 218 | 458 | 252 |
| 6 | EAM-400-220-220-87-42 | 68 | 146 | 214 | 362 | 382 | 264 | 218 | 458 | 252 |
| 7 | EAM-400-175-220-68-42 | 68 | 125 | 193 | 341 | 361 | 264 | 218 | 458 | 252 |
| 8 | EAM-400-220-220-89-45 | 68 | 148 | 216 | 364 | 384 | 264 | 218 | 458 | 252 |
| 9 | EAM-400-175-215-63-45 | 68 | 120 | 188 | 336 | 356 | 259 | 218 | 453 | 247 |
| 10 | EAM-400-175-220-60-45 | 68 | 119 | 187 | 335 | 355 | 264 | 218 | 458 | 252 |
| 11 | EAM-400-220-220-100-46 | 68 | 157 | 225 | 373 | 393 | 264 | 218 | 458 | 252 |
| 12 | EAM-400-220-220-97-46 | 68 | 156 | 224 | 372 | 392 | 264 | 218 | 458 | 252 |
| 13 | EAM-400-220-220-90-48 | 68 | 147 | 215 | 363 | 383 | 264 | 218 | 458 | 252 |
| 14 | EAM-400-220-220-77-48 | 68 | 136 | 204 | 352 | 372 | 264 | 218 | 458 | 252 |
| 15 | EAM-400-220-220-81-48 | 68 | 138 | 206 | 354 | 374 | 264 | 218 | 458 | 252 |
| 16 | EAM-400-220-240-81-50 | 68 | 140 | 208 | 356 | 376 | 284 | 218 | 478 | 272 |
| 17 | EAM-400-220-240-88-50 | 68 | 145 | 213 | 361 | 381 | 284 | 218 | 478 | 272 |
| 18 | EAM-400-220-220-70-52 | 68 | 129 | 197 | 345 | 365 | 264 | 218 | 458 | 252 |
| 19 | EAM-400-220-210-60-53 | 68 | 117 | 185 | 333 | 353 | 254 | 218 | 448 | 242 |
| 20 | EAM-400-220-220-90-55 | 68 | 149 | 217 | 365 | 385 | 264 | 218 | 458 | 252 |
| 21 | EAM-400-220-220-79-56 | 68 | 136 | 204 | 352 | 372 | 264 | 218 | 458 | 252 |
| 22 | EAM-400-220-220-73-63 | 68 | 132 | 200 | 348 | 368 | 264 | 218 | 458 | 252 |
| 23 | EAM-800-90-215-93-45 | 68 | 150 | 218 | 366 | 386 | 259 | 218 | 453 | 247 |
| 24 | EAM-800-175-215-60-98 | 68 | 119 | 187 | 335 | 355 | 259 | 218 | 453 | 247 |
| 25 | EAM-800-175-215-63-109 | 68 | 120 | 188 | 336 | 356 | 259 | 218 | 453 | 247 |
| 26 | EAM-800-220-220-97-132 | 68 | 156 | 224 | 372 | 392 | 264 | 218 | 458 | 252 |
| 27 | EAM-800-220-220-77-135 | 68 | 134 | 202 | 350 | 370 | 264 | 218 | 458 | 252 |
| 28 | EAM-800-220-240-115-137 | 68 | 174 | 242 | 390 | 410 | 284 | 218 | 478 | 272 |
| 29 | EAM-800-220-220-77-137 | 68 | 134 | 202 | 350 | 370 | 264 | 218 | 458 | 252 |
| 30 | EAM-800-250-220-120-141 | 68 | 179 | 247 | 395 | 415 | 264 | 218 | 458 | 252 |
| 31 | EAM-800-275-240-115-146 | 68 | 172 | 240 | 388 | 408 | 284 | 218 | 478 | 272 |
| 32 | EAM-800-250-220-100-159 | 68 | 159 | 227 | 375 | 395 | 264 | 218 | 458 | 252 |
| 33 | EAM-800-300-220-140-168 | 68 | 199 | 267 | 415 | 435 | 264 | 218 | 458 | 252 |
| 34 | EAM-800-450-220-194-265 | 68 | 253 | 321 | 469 | 489 | 264 | 218 | 458 | 252 |

**KEY FEATURES:**

- 400V/800V 3-PHASE IPM MOTOR [HAIRPIN/STRANDED WIRE]
- INTEGRATED PARK LOCK BY BLDC DRIVEN
- AIR BREATHER AND OIL RELEASE NUT
- A 3-PHASE BLDC OIL PUMP WITH INTEGRATED INLETS
- CUSTOM 7:1 TO 9.5:1 TOTAL GEAR-TRAIN RATIO
- OPEN DIFFERENTIAL RATION1.3:1 OR 1.4:1
- IP6K9K SEALING
- INTEGRAETD OIL COOLING SYSTEM FOR GEARTRAIN
- NTC / RTD FOR THERMAL PROTECTION
- BEARING ISO 492 CLASS 2
- SEALING PER ISO 60529 UP TO IP6K9K
- INSULATION NEMA CLASSES: H, 220 [C]

- AL HOUSING –ANODIZED
- HIGH STRENGTH SHAFT –PASSIVATED
- ANNEALED M19 LAMINATIONS.
- CORROSION RESISTANCE ACCESSORIES
- CHEMICAL RESISTANCE SEALS
- ROHS BOM COMPLIANCY
- HARMONIZED AND SCALABLE DESIGN
- PIGTAIL/ TERMINAL ASSY WITH INTERLOCK HV CIRCUIT OPTIONAL
- AMPSEAL LV TERMINALS
- VIBRATION CLASS V2-V5 PER CUSTOMER NEED
- COOLING SYSTEM NATURALLY COOLED/ WATER JACKET
- VR RESOLVER

| PERFORMANCE DESCRIPTION | |
|---|---|
| P1 | MIN DC VOLTAGE FOR FULL PERFORMANCE [V] |
| P2 | PEAK 10 SEC. CURRENT [A] |
| P3 | MAX CONTINOUS CURRENT [A] |
| P4 | BASE MOTOR SPEED |
| P5 | MAX MOTOR SPEED |
| P6 | PEAK MOTOR TORQUE [N.m] |
| P7 | MAX CONTINOUS TORQUE [N.m] @ MOTOR @ MAX SPEED |
| P8 | PEAK POWER [KW] |
| P9 | PEAK POWER [KW] @ MAX SPEED |
| P10 | MAX CONTINOUS POWER [KW] @ MAX SPEED |

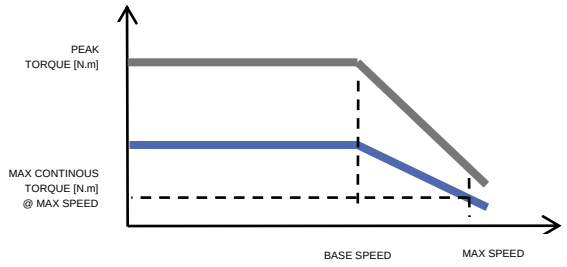


**PERFORMANCE TABLE @ MOTOR OUTPUT**

| ORDER | PART NUMBER | P1 | P2 | P3 | P4 | P5 | P6 | P7 | P8 | P9 | P10 |
|---|---|---|---|---|---|---|---|---|---|---|---|
| 1 | EAM-400-125-180-90-31 | 280 | 250 | 125 | 5700 | 14000 | 103 | 21 | 61 | 61 | 31 |
| 2 | EAM-400-150-215-60-33 | 280 | 300 | 150 | 4600 | 14000 | 155 | 23 | 74 | 74 | 33 |
| 3 | EAM-400-125-215-60-35 | 280 | 250 | 125 | 4700 | 14000 | 125 | 24 | 61 | 61 | 35 |
| 4 | EAM-400-125-200-70-35 | 280 | 250 | 125 | 4700 | 14000 | 130 | 24 | 64 | 64 | 35 |
| 5 | EAM-400-150-220-60-41 | 280 | 300 | 150 | 4600 | 14000 | 155 | 28 | 74 | 74 | 41 |
| 6 | EAM-400-220-220-87-42 | 280 | 450 | 220 | 5000 | 13500 | 220 | 30 | 114 | 114 | 42 |
| 7 | EAM-400-175-220-68-42 | 280 | 350 | 175 | 4900 | 14000 | 170 | 29 | 87 | 87 | 42 |
| 8 | EAM-400-220-220-89-45 | 280 | 450 | 220 | 5500 | 13000 | 230 | 33 | 132 | 132 | 45 |
| 9 | EAM-400-175-215-63-45 | 280 | 350 | 175 | 4700 | 14000 | 170 | 31 | 83 | 83 | 45 |
| 10 | EAM-400-175-220-60-45 | 280 | 350 | 175 | 4600 | 14000 | 175 | 31 | 84 | 84 | 45 |
| 11 | EAM-400-220-220-100-46 | 280 | 450 | 220 | 5500 | 12000 | 220 | 37 | 126 | 126 | 46 |
| 12 | EAM-400-220-220-97-46 | 280 | 450 | 220 | 6000 | 13500 | 200 | 33 | 125 | 125 | 46 |
| 13 | EAM-400-220-220-90-48 | 280 | 450 | 220 | 3750 | 14000 | 200 | 33 | 78 | 78 | 48 |
| 14 | EAM-400-220-220-77-48 | 280 | 450 | 220 | 5000 | 14000 | 220 | 33 | 114 | 114 | 48 |
| 15 | EAM-400-220-220-81-48 | 280 | 450 | 220 | 5000 | 14000 | 220 | 33 | 114 | 114 | 48 |
| 16 | EAM-400-220-240-81-50 | 280 | 450 | 220 | 3000 | 12000 | 320 | 40 | 100 | 100 | 50 |
| 17 | EAM-400-220-240-88-50 | 280 | 450 | 220 | 3000 | 12000 | 320 | 40 | 100 | 100 | 50 |
| 18 | EAM-400-220-220-70-52 | 280 | 450 | 220 | 7000 | 12500 | 175 | 40 | 127 | 127 | 52 |
| 19 | EAM-400-220-210-60-53 | 280 | 450 | 220 | 8000 | 12500 | 145 | 41 | 121 | 121 | 53 |
| 20 | EAM-400-220-220-90-55 | 280 | 450 | 220 | 3600 | 14000 | 270 | 38 | 101 | 101 | 55 |
| 21 | EAM-400-220-220-79-56 | 330 | 450 | 220 | 9000 | 13500 | 190 | 40 | 178 | 178 | 56 |
| 22 | EAM-400-220-220-73-63 | 280 | 450 | 220 | 4300 | 14000 | 220 | 43 | 98 | 98 | 63 |
| 23 | EAM-800-90-215-93-45 | 540 | 180 | 90 | 4500 | 14000 | 180 | 31 | 84 | 64 | 45 |
| 24 | EAM-800-175-215-60-98 | 540 | 350 | 175 | 8200 | 17500 | 150 | 54 | 128 | 112 | 98 |
| 25 | EAM-800-175-215-63-109 | 540 | 350 | 175 | 9100 | 17500 | 170 | 60 | 161 | 135 | 109 |
| 26 | EAM-800-220-220-97-132 | 540 | 450 | 220 | 6000 | 17000 | 320 | 75 | 199 | 166 | 133 |
| 27 | EAM-800-220-220-77-135 | 540 | 450 | 220 | 6000 | 17500 | 320 | 74 | 200 | 235 | 135 |
| 28 | EAM-800-220-240-115-137 | 540 | 450 | 220 | 3500 | 17500 | 450 | 75 | 164 | 150 | 137 |
| 29 | EAM-800-220-220-77-137 | 540 | 450 | 220 | 6000 | 17500 | 320 | 75 | 200 | 168 | 137 |
| 30 | EAM-800-250-220-120-141 | 540 | 500 | 250 | 9600 | 17000 | 270 | 80 | 270 | 205 | 141 |
| 31 | EAM-800-275-240-115-146 | 540 | 550 | 275 | 3500 | 17500 | 510 | 80 | 186 | 175 | 146 |
| 32 | EAM-800-250-220-100-159 | 540 | 500 | 250 | 11700 | 17000 | 232 | 90 | 282 | 220 | 159 |
| 33 | EAM-800-300-220-140-168 | 540 | 600 | 300 | 8000 | 17000 | 385 | 95 | 320 | 244 | 168 |
| 34 | EAM-800-450-220-194-265 | 540 | 900 | 450 | 12000 | 17000 | 630 | 150 | 786 | 300 | 265 |

# ZEBRA EDM
# MODEL-B

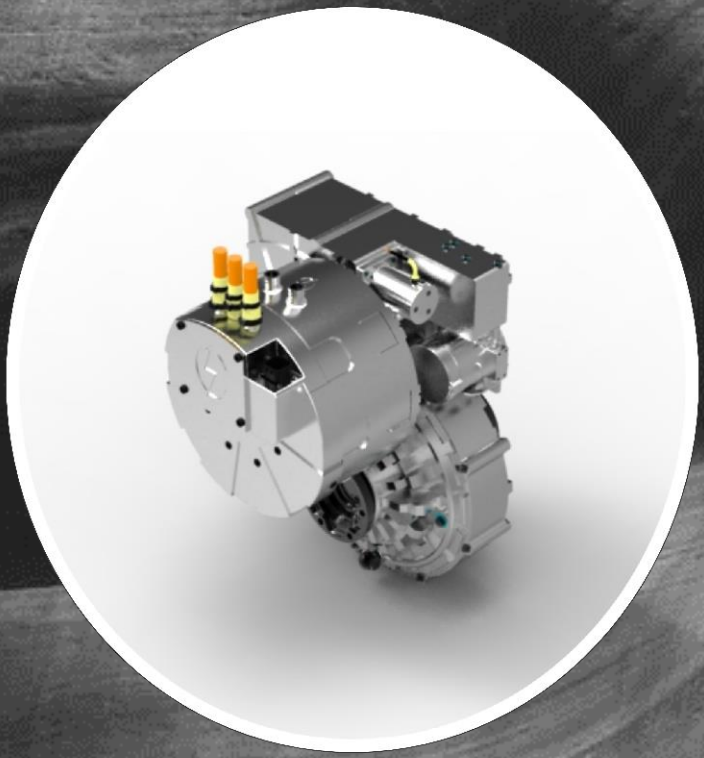

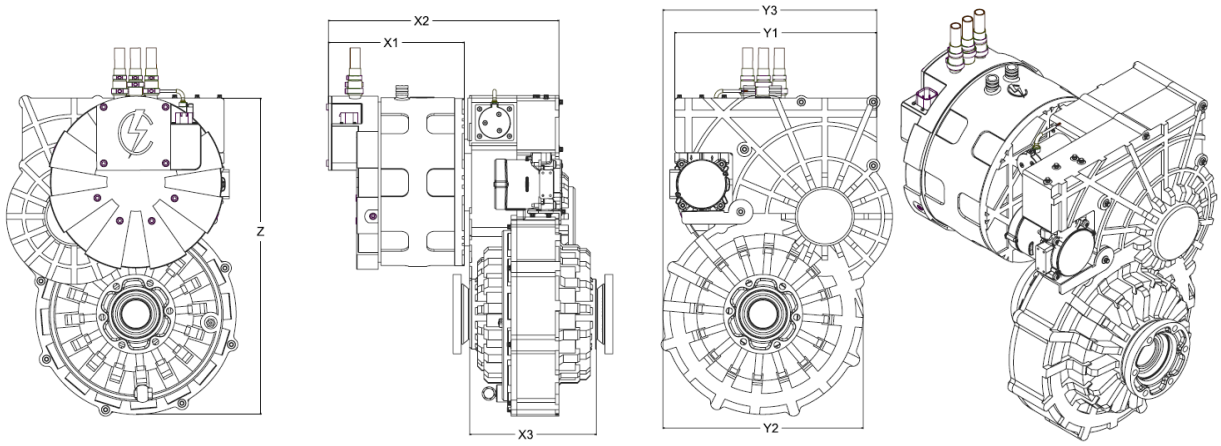


| MODELS | VOLTAGE [VDC] | CONTINOUS CURRENT | ACTIVE MOTOR OD | ACTIVE MOTOR LENGTH | CONTINOUS POWER @ MAX SPEED |
|---|---|---|---|---|---|
| ZEBRA EDM MODEL-B | VDC | A-RMS | [mm] | [mm] | kW |
| EBM | 260-400/540-800 | 90-450 | 180-240 | 50-200 | 33-265 |

| ORDER | PART NUMBER | L1 [mm] | L2 [mm] | X1 [mm] | X2[mm] | X3[mm] | Y1[mm] | Y2[mm] | Z[mm] | D1 [mm] |
|---|---|---|---|---|---|---|---|---|---|---|
| 1 | EBM-400-125-180-90-31 | 68 | 149 | 217 | 371 | 195 | 245 | 277 | 403 | 212 |
| 2 | EBM-400-150-215-60-33 | 68 | 119 | 187 | 341 | 195 | 280 | 277 | 438 | 247 |
| 3 | EBM-400-125-215-60-35 | 68 | 119 | 187 | 341 | 195 | 280 | 277 | 438 | 247 |
| 4 | EBM-400-125-200-70-35 | 68 | 129 | 197 | 351 | 195 | 265 | 277 | 423 | 232 |
| 5 | EBM-400-150-220-60-41 | 68 | 119 | 187 | 341 | 195 | 285 | 277 | 443 | 252 |
| 6 | EBM-400-220-220-87-42 | 68 | 146 | 214 | 368 | 195 | 285 | 277 | 443 | 252 |
| 7 | EBM-400-175-220-68-42 | 68 | 125 | 193 | 347 | 195 | 285 | 277 | 443 | 252 |
| 8 | EBM-400-220-220-89-45 | 68 | 148 | 216 | 370 | 195 | 285 | 277 | 443 | 252 |
| 9 | EBM-400-175-215-63-45 | 68 | 120 | 188 | 342 | 195 | 280 | 277 | 438 | 247 |
| 10 | EBM-400-175-220-60-45 | 68 | 119 | 187 | 341 | 195 | 285 | 277 | 443 | 252 |
| 11 | EBM-400-220-220-100-46 | 68 | 157 | 225 | 379 | 195 | 285 | 277 | 443 | 252 |
| 12 | EBM-400-220-220-97-46 | 68 | 156 | 224 | 378 | 195 | 285 | 277 | 443 | 252 |
| 13 | EBM-400-220-220-90-48 | 68 | 147 | 215 | 369 | 195 | 285 | 277 | 443 | 252 |
| 14 | EBM-400-220-220-77-48 | 68 | 136 | 204 | 358 | 195 | 285 | 277 | 443 | 252 |
| 15 | EBM-400-220-220-81-48 | 68 | 138 | 206 | 360 | 195 | 285 | 277 | 443 | 252 |
| 16 | EBM-400-220-240-81-50 | 68 | 140 | 208 | 362 | 195 | 305 | 277 | 463 | 272 |
| 17 | EBM-400-220-240-88-50 | 68 | 145 | 213 | 367 | 195 | 305 | 277 | 463 | 272 |
| 18 | EBM-400-220-220-70-52 | 68 | 129 | 197 | 351 | 195 | 285 | 277 | 443 | 252 |
| 19 | EBM-400-220-210-60-53 | 68 | 117 | 185 | 339 | 195 | 275 | 277 | 433 | 242 |
| 20 | EBM-400-220-220-90-55 | 68 | 149 | 217 | 371 | 195 | 285 | 277 | 443 | 252 |
| 21 | EBM-400-220-220-79-55 | 68 | 136 | 204 | 358 | 195 | 285 | 277 | 443 | 252 |
| 22 | EBM-400-220-220-73-63 | 68 | 132 | 200 | 354 | 195 | 285 | 277 | 443 | 252 |
| 23 | EBM-800-90-215-93-45 | 68 | 150 | 218 | 372 | 195 | 280 | 277 | 438 | 247 |
| 24 | EBM-800-175-215-60-98 | 68 | 119 | 187 | 341 | 195 | 280 | 277 | 438 | 247 |
| 25 | EBM-800-175-215-63-109 | 68 | 120 | 188 | 342 | 195 | 280 | 277 | 438 | 247 |
| 26 | EBM-800-220-220-97-132 | 68 | 156 | 224 | 378 | 195 | 285 | 277 | 443 | 252 |
| 27 | EBM-800-220-220-77-135 | 68 | 134 | 202 | 356 | 195 | 285 | 277 | 443 | 252 |
| 28 | EBM-800-220-240-115-137 | 68 | 174 | 242 | 396 | 195 | 305 | 277 | 463 | 272 |
| 29 | EBM-800-220-220-77-137 | 68 | 134 | 202 | 356 | 195 | 285 | 277 | 443 | 252 |
| 30 | EBM-800-250-220-120-141 | 68 | 179 | 247 | 401 | 195 | 285 | 277 | 443 | 252 |
| 31 | EBM-800-275-240-115-146 | 68 | 172 | 240 | 394 | 195 | 305 | 277 | 463 | 272 |
| 32 | EBM-800-250-220-100-159 | 68 | 159 | 227 | 381 | 195 | 285 | 277 | 443 | 252 |
| 33 | EBM-800-300-220-140-168 | 68 | 199 | 267 | 421 | 195 | 285 | 277 | 443 | 252 |
| 34 | EBM-800-450-220-194-265 | 68 | 253 | 321 | 475 | 195 | 285 | 277 | 443 | 252 |

**KEY FEATURES:**

- 400V/800V 3-PHASE IPM MOTOR [HAIRPIN/STRANDED WIRE]
- INTEGRATED PARK LOCK BY BLDC DRIVEN
- AIR BREATHER AND OIL RELEASE NUT
- A 3-PHASE BLDC OIL PUMP WITH INTEGRATED INLETS
- CUSTOM 7:1 TO 9.5:1 TOTAL GEAR-TRAIN RATIO
- OPEN DIFFERENTIAL RATION1.3:1 OR 1.4:1
- IP6K9K SEALING
- INTEGRAETD OIL COOLING SYSTEM FOR GEARTRAIN
- NTC / RTD FOR THERMAL PROTECTION
- BEARING ISO 492 CLASS 2
- SEALING PER ISO 60529 UP TO IP6K9K
- INSULATION NEMA CLASSES: H, 220 [C]
- AL HOUSING –ANODIZED
- HIGH STRENGTH SHAFT –PASSIVATED

- ANNEALED M19 LAMINATIONS.
- CORROSION RESISTANCE ACCESSORIES
- CHEMICAL RESISTANCE SEALS
- ROHS BOM COMPLIANCY
- HARMONIZED AND SCALABLE DESIGN
- PIGTAIL/ TERMINAL ASSY WITH INTERLOCK HV CIRCUIT OPTIONAL
- AMPSEAL LV TERMINALS
- VIBRATION CLASS V2-V5 PER CUSTOMER NEED
- COOLING SYSTEM NATURALLY COOLED/ WATER JACKET
- VR RESOLVER

| PERFORMANCE DESCRIPTION | |
|---|---|
| P1 | MIN DC VOLTAGE FOR FULL PERFORMANCE [V] |
| P2 | PEAK 10 SEC. CURRENT [A] |
| P3 | MAX CONTINOUS CURRENT [A] |
| P4 | BASE MOTOR SPEED |
| P5 | MAX MOTOR SPEED |
| P6 | PEAK MOTOR TORQUE [N.m] |
| P7 | MAX CONTINOUS TORQUE [N.m] @ MOTOR @ MAX SPEED |
| P8 | PEAK POWER [KW] |
| P9 | PEAK POWER [KW] @ MAX SPEED |
| P10 | MAX CONTINOUS POWER [KW] @ MAX SPEED |

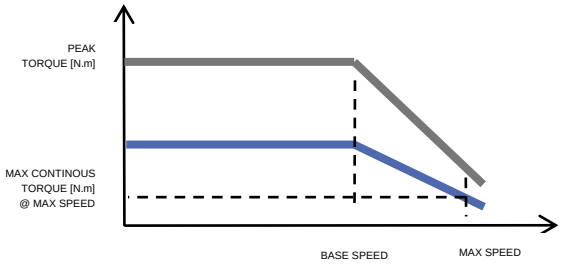


**PERFORMANCE TABLE**

| ORDER | PART NUMBER | P1 | P2 | P3 | P4 | P5 | P6 | P7 | P8 | P9 | P10 |
|---|---|---|---|---|---|---|---|---|---|---|---|
| 1 | EBM-400-125-180-90-31 | 280 | 250 | 125 | 5700 | 14000 | 103 | 21 | 61 | 61 | 31 |
| 2 | EBM-400-150-215-60-33 | 280 | 300 | 150 | 4600 | 14000 | 155 | 23 | 74 | 74 | 33 |
| 3 | EBM-400-125-215-60-35 | 280 | 250 | 125 | 4700 | 14000 | 125 | 24 | 61 | 61 | 35 |
| 4 | EBM-400-125-200-70-35 | 280 | 250 | 125 | 4700 | 14000 | 130 | 24 | 64 | 64 | 35 |
| 5 | EBM-400-150-220-60-41 | 280 | 300 | 150 | 4600 | 14000 | 155 | 28 | 74 | 74 | 41 |
| 6 | EBM-400-220-220-87-42 | 280 | 450 | 220 | 5000 | 13500 | 220 | 30 | 114 | 114 | 42 |
| 7 | EBM-400-175-220-68-42 | 280 | 350 | 175 | 4900 | 14000 | 170 | 29 | 87 | 87 | 42 |
| 8 | EBM-400-220-220-89-45 | 280 | 450 | 220 | 5500 | 13000 | 230 | 33 | 132 | 132 | 45 |
| 9 | EBM-400-175-215-63-45 | 280 | 350 | 175 | 4700 | 14000 | 170 | 31 | 83 | 83 | 45 |
| 10 | EBM-400-175-220-60-45 | 280 | 350 | 175 | 4600 | 14000 | 175 | 31 | 84 | 84 | 45 |
| 11 | EBM-400-220-220-100-46 | 280 | 450 | 220 | 5500 | 12000 | 220 | 37 | 126 | 126 | 46 |
| 12 | EBM-400-220-220-97-46 | 280 | 450 | 220 | 6000 | 13500 | 200 | 33 | 125 | 125 | 46 |
| 13 | EBM-400-220-220-90-48 | 280 | 450 | 220 | 3750 | 14000 | 200 | 33 | 78 | 78 | 48 |
| 14 | EBM-400-220-220-77-48 | 280 | 450 | 220 | 5000 | 14000 | 220 | 33 | 114 | 114 | 48 |
| 15 | EBM-400-220-220-81-48 | 280 | 450 | 220 | 5000 | 14000 | 220 | 33 | 114 | 114 | 48 |
| 16 | EBM-400-220-240-81-50 | 280 | 450 | 220 | 3000 | 12000 | 320 | 40 | 100 | 100 | 50 |
| 17 | EBM-400-220-240-88-50 | 280 | 450 | 220 | 3000 | 12000 | 320 | 40 | 100 | 100 | 50 |
| 18 | EBM-400-220-220-70-52 | 280 | 450 | 220 | 7000 | 12500 | 175 | 40 | 127 | 127 | 52 |
| 19 | EBM-400-220-210-60-53 | 280 | 450 | 220 | 8000 | 12500 | 145 | 41 | 121 | 121 | 53 |
| 20 | EBM-400-220-220-90-55 | 280 | 450 | 220 | 3600 | 14000 | 270 | 38 | 101 | 101 | 55 |
| 21 | EBM-400-220-220-79-55 | 330 | 450 | 220 | 9000 | 13500 | 190 | 40 | 178 | 178 | 56 |
| 22 | EBM-400-220-220-73-63 | 280 | 450 | 220 | 4300 | 14000 | 220 | 43 | 98 | 98 | 63 |
| 23 | EBM-800-90-215-93-45 | 540 | 180 | 90 | 4500 | 14000 | 180 | 31 | 84 | 64 | 45 |
| 24 | EBM-800-175-215-60-98 | 540 | 350 | 175 | 8200 | 17500 | 150 | 54 | 128 | 112 | 98 |
| 25 | EBM-800-175-215-63-109 | 540 | 350 | 175 | 9100 | 17500 | 170 | 60 | 161 | 135 | 109 |
| 26 | EBM-800-220-220-97-132 | 540 | 450 | 220 | 6000 | 17000 | 320 | 75 | 199.68 | 166 | 133 |
| 27 | EBM-800-220-220-77-135 | 540 | 450 | 220 | 6000 | 17500 | 320 | 74 | 200 | 235 | 135 |
| 28 | EBM-800-220-240-115-137 | 540 | 450 | 220 | 3500 | 17500 | 450 | 75 | 164 | 150 | 137 |
| 29 | EBM-800-220-220-77-137 | 540 | 450 | 220 | 6000 | 17500 | 320 | 75 | 200 | 168 | 137 |
| 30 | EBM-800-250-220-120-141 | 540 | 500 | 250 | 9600 | 17000 | 270 | 80 | 270 | 205 | 141 |
| 31 | EBM-800-275-240-115-146 | 540 | 550 | 275 | 3500 | 17500 | 510 | 80 | 186 | 175 | 146 |
| 32 | EBM-800-250-220-100-159 | 540 | 500 | 250 | 11700 | 17000 | 232 | 90 | 282 | 220 | 159 |
| 33 | EBM-800-300-220-140-168 | 540 | 600 | 300 | 8000 | 17000 | 385 | 95 | 320 | 244 | 168 |
| 34 | EBM-800-450-220-194-265 | 540 | 900 | 450 | 12000 | 17000 | 630 | 150 | 786 | 300 | 265 |

# ZEBRA EDM
# MODEL-C

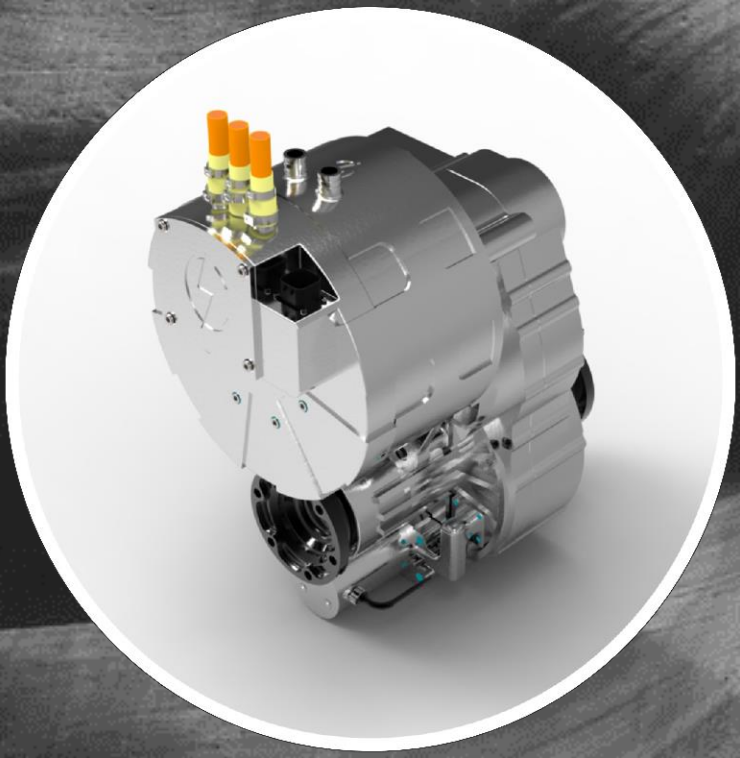

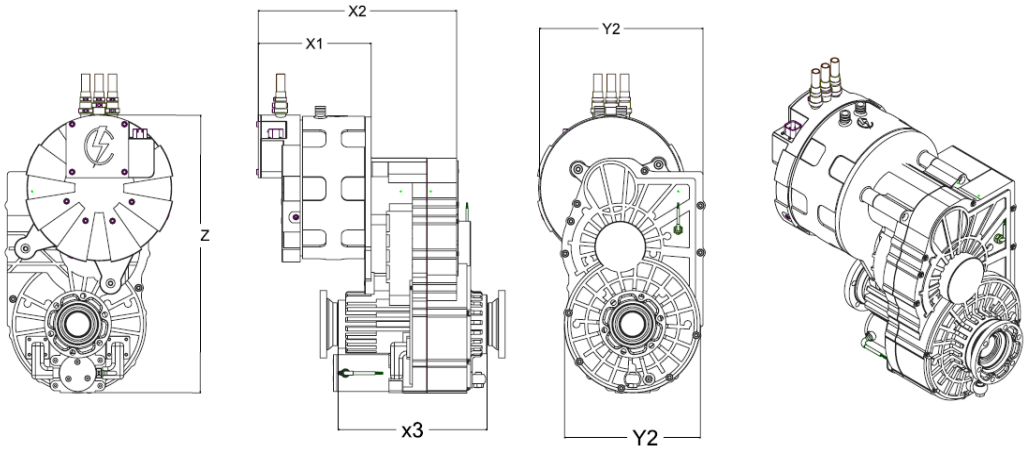


| MODELS | VOLTAGE [VDC] | CONTINOUS CURRENT | ACTIVE MOTOR OD | ACTIVE MOTOR LENGTH | CONTINOUS POWER @ MAX SPEED |
|---|---|---|---|---|---|
| ZEBRA EDM MODEL-C | VDC | A-RMS | [mm] | [mm] | kW |
| ECM | 260-400/540-800 | 90-450 | 180-240 | 50-200 | 33-265 |

| ORDER | PART NUMBER | L1 [mm] | L2 [mm] | X1 [mm] | X2[mm] | X3[mm] | Y1[mm] | Y2[mm] | Z[mm] | D1 [mm] |
|---|---|---|---|---|---|---|---|---|---|---|
| 1 | ECM-400-125-180-90-31 | 68 | 147 | 215 | 377 | 285 | 239 | 223 | 391 | 212 |
| 2 | ECM-400-150-215-60-33 | 68 | 117 | 185 | 347 | 285 | 274 | 223 | 453 | 247 |
| 3 | ECM-400-125-215-60-35 | 68 | 117 | 185 | 347 | 285 | 274 | 223 | 453 | 247 |
| 4 | ECM-400-125-200-70-35 | 68 | 127 | 195 | 357 | 285 | 259 | 223 | 438 | 232 |
| 5 | ECM-400-150-220-60-41 | 68 | 117 | 185 | 347 | 285 | 279 | 223 | 458 | 252 |
| 6 | ECM-400-220-220-87-42 | 68 | 144 | 212 | 374 | 285 | 279 | 223 | 458 | 252 |
| 7 | ECM-400-175-220-68-42 | 68 | 125 | 193 | 355 | 285 | 279 | 223 | 458 | 252 |
| 8 | ECM-400-220-220-89-45 | 68 | 146 | 214 | 376 | 285 | 279 | 223 | 458 | 252 |
| 9 | ECM-400-175-215-63-45 | 68 | 120 | 188 | 350 | 285 | 274 | 223 | 453 | 247 |
| 10 | ECM-400-175-220-60-45 | 68 | 117 | 185 | 347 | 285 | 279 | 223 | 458 | 252 |
| 11 | ECM-400-220-220-100-46 | 68 | 157 | 225 | 387 | 285 | 279 | 223 | 458 | 252 |
| 12 | ECM-400-220-220-97-46 | 68 | 154 | 222 | 384 | 285 | 279 | 223 | 458 | 252 |
| 13 | ECM-400-220-220-90-48 | 68 | 147 | 215 | 377 | 285 | 279 | 223 | 458 | 252 |
| 14 | ECM-400-220-220-77-48 | 68 | 134 | 202 | 364 | 285 | 279 | 223 | 458 | 252 |
| 15 | ECM-400-220-220-81-48 | 68 | 138 | 206 | 368 | 285 | 279 | 223 | 458 | 252 |
| 16 | ECM-400-220-240-81-50 | 68 | 138 | 206 | 368 | 285 | 299 | 223 | 478 | 272 |
| 17 | ECM-400-220-240-88-50 | 68 | 145 | 213 | 375 | 285 | 299 | 223 | 478 | 272 |
| 18 | ECM-400-220-220-70-52 | 68 | 127 | 195 | 357 | 285 | 279 | 223 | 458 | 252 |
| 19 | ECM-400-220-210-60-53 | 68 | 117 | 185 | 347 | 285 | 269 | 223 | 448 | 242 |
| 20 | ECM-400-220-220-90-55 | 68 | 147 | 215 | 377 | 285 | 279 | 223 | 458 | 252 |
| 21 | ECM-400-220-220-79-56 | 68 | 136 | 204 | 366 | 285 | 279 | 223 | 458 | 252 |
| 22 | ECM-400-220-220-73-63 | 68 | 130 | 198 | 360 | 285 | 279 | 223 | 458 | 252 |
| 23 | ECM-800-90-215-93-45 | 68 | 150 | 218 | 380 | 285 | 274 | 223 | 453 | 247 |
| 24 | ECM-800-175-215-60-98 | 68 | 117 | 185 | 347 | 285 | 274 | 223 | 453 | 247 |
| 25 | ECM-800-175-215-63-109 | 68 | 120 | 188 | 350 | 285 | 274 | 223 | 453 | 247 |
| 26 | ECM-800-220-220-97-132 | 68 | 154 | 222 | 384 | 285 | 279 | 223 | 458 | 252 |
| 27 | ECM-800-220-220-77-135 | 68 | 134 | 202 | 364 | 285 | 279 | 223 | 458 | 252 |
| 28 | ECM-800-220-240-115-137 | 68 | 172 | 240 | 402 | 285 | 299 | 223 | 478 | 272 |
| 29 | ECM-800-220-220-77-137 | 68 | 134 | 202 | 364 | 285 | 279 | 223 | 458 | 252 |
| 30 | ECM-800-250-220-120-141 | 68 | 177 | 245 | 407 | 285 | 279 | 223 | 458 | 252 |
| 31 | ECM-800-275-240-115-146 | 68 | 172 | 240 | 402 | 285 | 299 | 223 | 478 | 272 |
| 32 | ECM-800-250-220-100-159 | 68 | 157 | 225 | 387 | 285 | 279 | 223 | 458 | 252 |
| 33 | ECM-800-300-220-140-168 | 68 | 197 | 265 | 427 | 285 | 279 | 223 | 458 | 252 |
| 34 | ECM-800-450-220-194-265 | 68 | 251 | 319 | 481 | 285 | 279 | 223 | 458 | 252 |

**KEY FEATURES:**

- 400V/800V 3-PHASE IPM MOTOR [HAIRPIN/STRANDED WIRE]
- INTEGRATED PARK LOCK BY BLDC DRIVEN
- AIR BREATHER AND OIL RELEASE NUT
- A 3-PHASE BLDC OIL PUMP WITH INTEGRATED INLETS
- CUSTOM 7:1 TO 9.5:1 TOTAL GEAR-TRAIN RATIO
- OPEN DIFFERENTIAL RATION1.3:1 OR 1.4:1
- IP6K9K SEALING
- INTEGRAETD OIL COOLING SYSTEM FOR GEARTRAIN
- NTC / RTD FOR THERMAL PROTECTION
- BEARING ISO 492 CLASS 2
- SEALING PER ISO 60529 UP TO IP6K9K
- INSULATION NEMA CLASSES: H, 220 [C]

- AL HOUSING –ANODIZED
- HIGH STRENGTH SHAFT –PASSIVATED
- ANNEALED M19 LAMINATIONS.
- CORROSION RESISTANCE ACCESSORIES
- CHEMICAL RESISTANCE SEALS
- ROHS BOM COMPLIANCY
- HARMONIZED AND SCALABLE DESIGN
- PIGTAIL/ TERMINAL ASSY WITH INTERLOCK HV CIRCUIT OPTIONAL
- AMPSEAL LV TERMINALS
- VIBRATION CLASS V2-V5 PER CUSTOMER NEED
- COOLING SYSTEM NATURALLY COOLED/ WATER JACKET
- VR RESOLVER

| PERFORMANCE DESCRIPTION | |
|---|---|
| P1 | MIN DC VOLTAGE FOR FULL PERFORMANCE [V] |
| P2 | PEAK 10 SEC. CURRENT [A] |
| P3 | MAX CONTINOUS CURRENT [A] |
| P4 | BASE MOTOR SPEED |
| P5 | MAX MOTOR SPEED |
| P6 | PEAK MOTOR TORQUE [N.m] |
| P7 | MAX CONTINOUS TORQUE [N.m] @ MOTOR @ MAX SPEED |
| P8 | PEAK POWER [KW] |
| P9 | PEAK POWER [KW] @ MAX SPEED |
| P10 | MAX CONTINOUS POWER [KW] @ MAX SPEED |

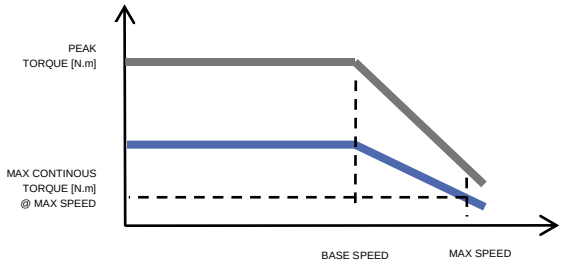


**PERFORMANCE TABLE @ MOTOR OUTPUT**

| ORDER | PART NUMBER | P1 | P2 | P3 | P4 | P5 | P6 | P7 | P8 | P9 | P10 |
|---|---|---|---|---|---|---|---|---|---|---|---|
| 1 | ECM-400-125-180-90-31 | 280 | 250 | 125 | 5700 | 14000 | 103 | 21 | 61 | 61 | 31 |
| 2 | ECM-400-150-215-60-33 | 280 | 300 | 150 | 4600 | 14000 | 155 | 23 | 74 | 74 | 33 |
| 3 | ECM-400-125-215-60-35 | 280 | 250 | 125 | 4700 | 14000 | 125 | 24 | 61 | 61 | 35 |
| 4 | ECM-400-125-200-70-35 | 280 | 250 | 125 | 4700 | 14000 | 130 | 24 | 64 | 64 | 35 |
| 5 | ECM-400-150-220-60-41 | 280 | 300 | 150 | 4600 | 14000 | 155 | 28 | 74 | 74 | 41 |
| 6 | ECM-400-220-220-87-42 | 280 | 450 | 220 | 5000 | 13500 | 220 | 30 | 114 | 114 | 42 |
| 7 | ECM-400-175-220-68-42 | 280 | 350 | 175 | 4900 | 14000 | 170 | 29 | 87 | 87 | 42 |
| 8 | ECM-400-220-220-89-45 | 280 | 450 | 220 | 5500 | 13000 | 230 | 33 | 132 | 132 | 45 |
| 9 | ECM-400-175-215-63-45 | 280 | 350 | 175 | 4700 | 14000 | 170 | 31 | 83 | 83 | 45 |
| 10 | ECM-400-175-220-60-45 | 280 | 350 | 175 | 4600 | 14000 | 175 | 31 | 84 | 84 | 45 |
| 11 | ECM-400-220-220-100-46 | 280 | 450 | 220 | 5500 | 12000 | 220 | 37 | 126 | 126 | 46 |
| 12 | ECM-400-220-220-97-46 | 280 | 450 | 220 | 6000 | 13500 | 200 | 33 | 125 | 125 | 46 |
| 13 | ECM-400-220-220-90-48 | 280 | 450 | 220 | 3750 | 14000 | 200 | 33 | 78 | 78 | 48 |
| 14 | ECM-400-220-220-77-48 | 280 | 450 | 220 | 5000 | 14000 | 220 | 33 | 114 | 114 | 48 |
| 15 | ECM-400-220-220-81-48 | 280 | 450 | 220 | 5000 | 14000 | 220 | 33 | 114 | 114 | 48 |
| 16 | ECM-400-220-240-81-50 | 280 | 450 | 220 | 3000 | 12000 | 320 | 40 | 100 | 100 | 50 |
| 17 | ECM-400-220-240-88-50 | 280 | 450 | 220 | 3000 | 12000 | 320 | 40 | 100 | 100 | 50 |
| 18 | ECM-400-220-220-70-52 | 280 | 450 | 220 | 7000 | 12500 | 175 | 40 | 127 | 127 | 52 |
| 19 | ECM-400-220-210-60-53 | 280 | 450 | 220 | 8000 | 12500 | 145 | 41 | 121 | 121 | 53 |
| 20 | ECM-400-220-220-90-55 | 280 | 450 | 220 | 3600 | 14000 | 270 | 38 | 101 | 101 | 55 |
| 21 | ECM-400-220-220-79-56 | 330 | 450 | 220 | 9000 | 13500 | 190 | 40 | 178 | 178 | 56 |
| 22 | ECM-400-220-220-73-63 | 280 | 450 | 220 | 4300 | 14000 | 220 | 43 | 98 | 98 | 63 |
| 23 | ECM-800-90-215-93-45 | 540 | 180 | 90 | 4500 | 14000 | 180 | 31 | 84 | 64 | 45 |
| 24 | ECM-800-175-215-60-98 | 540 | 350 | 175 | 8200 | 17500 | 150 | 54 | 128 | 112 | 98 |
| 25 | ECM-800-175-215-63-109 | 540 | 350 | 175 | 9100 | 17500 | 170 | 60 | 161 | 135 | 109 |
| 26 | ECM-800-220-220-97-132 | 540 | 450 | 220 | 6000 | 17000 | 320 | 75 | 199.68 | 166 | 133 |
| 27 | ECM-800-220-220-77-135 | 540 | 450 | 220 | 6000 | 17500 | 320 | 74 | 200 | 235 | 135 |
| 28 | ECM-800-220-240-115-137 | 540 | 450 | 220 | 3500 | 17500 | 450 | 75 | 164 | 150 | 137 |
| 29 | ECM-800-220-220-77-137 | 540 | 450 | 220 | 6000 | 17500 | 320 | 75 | 200 | 168 | 137 |
| 30 | ECM-800-250-220-120-141 | 540 | 500 | 250 | 9600 | 17000 | 270 | 80 | 270 | 205 | 141 |
| 31 | ECM-800-275-240-115-146 | 540 | 550 | 275 | 3500 | 17500 | 510 | 80 | 186 | 175 | 146 |
| 32 | ECM-800-250-220-100-159 | 540 | 500 | 250 | 11700 | 17000 | 232 | 90 | 282 | 220 | 159 |
| 33 | ECM-800-300-220-140-168 | 540 | 600 | 300 | 8000 | 17000 | 385 | 95 | 320 | 244 | 168 |
| 34 | ECM-800-450-220-194-265 | 540 | 900 | 450 | 12000 | 17000 | 630 | 150 | 786 | 300 | 265 |

# CHEETAH EDM MODEL-A

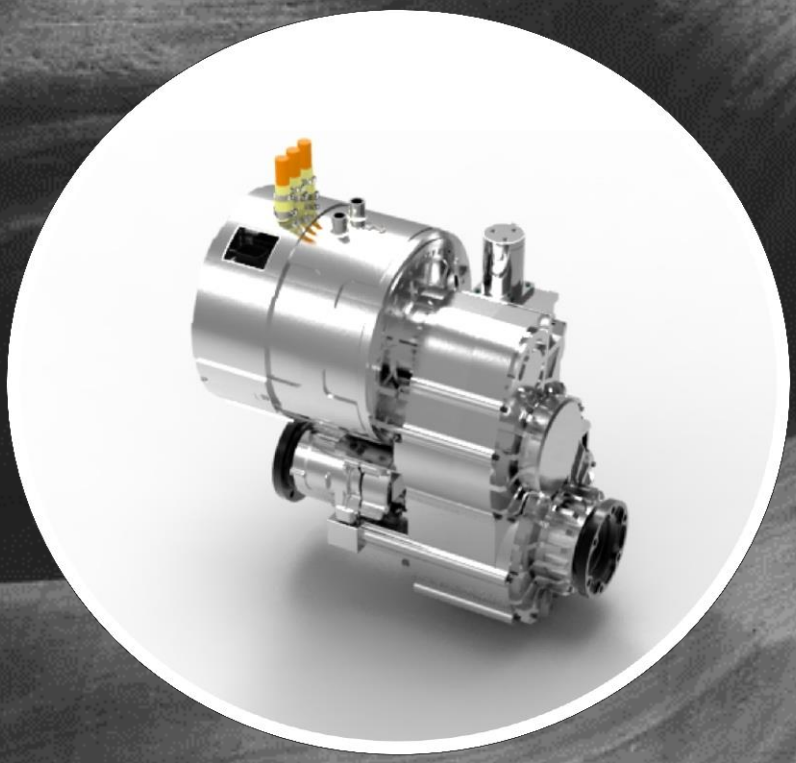

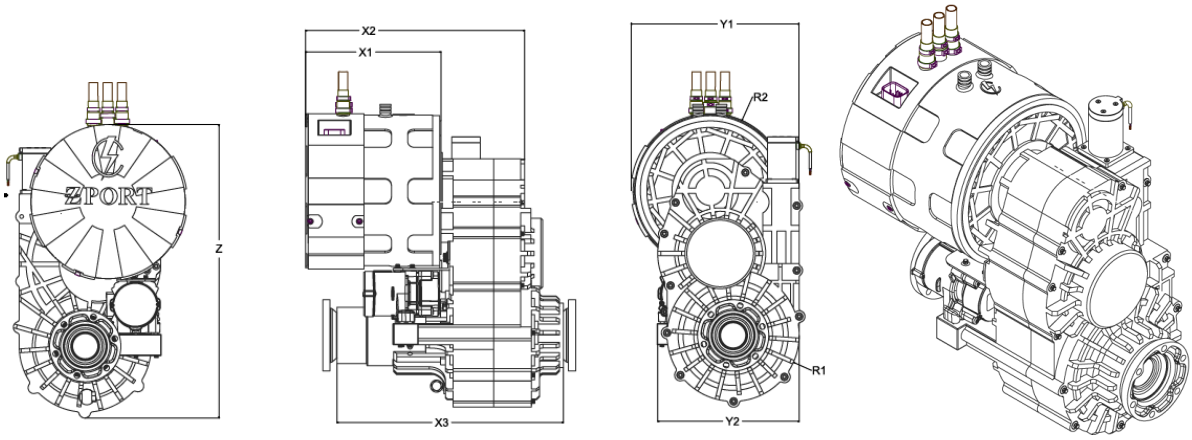


| MODELS | VOLTAGE [VDC] | CONTINOUS CURRENT | ACTIVE MOTOR OD | ACTIVE MOTOR LENGTH | CONTINOUS POWER @ MAX SPEED |
|---|---|---|---|---|---|
| CHEETAH EDM MODEL-A | VDC | A-RMS | [mm] | [mm] | kW |
| EZAM | 260-400/540-800 | 90-450 | 180-240 | 50-200 | 33-265 |

| ORDER | PART NUMBER | L1 [mm] | L2 [mm] | X1 [mm] | X2[mm] | X3[mm] | Y1[mm] | Y2[mm] | Z[mm] | D1 [mm] |
|---|---|---|---|---|---|---|---|---|---|---|
| 1 | EZAM-400-125-180-90-31 | 90 | 149 | 239 | 387 | 407 | 224 | 218 | 418 | 212 |
| 2 | EZAM-400-150-215-60-33 | 90 | 119 | 209 | 357 | 377 | 259 | 218 | 453 | 247 |
| 3 | EZAM-400-125-215-60-35 | 90 | 119 | 209 | 357 | 377 | 259 | 218 | 453 | 247 |
| 4 | EZAM-400-125-200-70-35 | 90 | 129 | 219 | 367 | 387 | 244 | 218 | 438 | 232 |
| 5 | EZAM-400-150-220-60-41 | 90 | 119 | 210 | 357 | 377 | 264 | 218 | 458 | 252 |
| 6 | EZAM-400-220-220-87-42 | 90 | 146 | 236 | 384 | 404 | 264 | 218 | 458 | 252 |
| 7 | EZAM-400-175-220-68-42 | 90 | 125 | 215 | 363 | 383 | 264 | 218 | 458 | 252 |
| 8 | EZAM-400-220-220-89-45 | 90 | 148 | 238 | 386 | 406 | 264 | 218 | 458 | 252 |
| 9 | EZAM-400-175-215-63-45 | 90 | 120 | 210 | 358 | 378 | 259 | 218 | 453 | 247 |
| 10 | EZAM-400-175-220-60-45 | 90 | 119 | 209 | 357 | 377 | 264 | 218 | 458 | 252 |
| 11 | EZAM-400-220-220-100-46 | 90 | 157 | 247 | 395 | 415 | 264 | 218 | 458 | 252 |
| 12 | EZAM-400-220-220-97-46 | 90 | 156 | 246 | 394 | 414 | 264 | 218 | 458 | 252 |
| 13 | EZAM-400-220-220-90-48 | 90 | 147 | 237 | 385 | 405 | 264 | 218 | 458 | 252 |
| 14 | EZAM-400-220-220-77-48 | 90 | 136 | 226 | 374 | 394 | 264 | 218 | 458 | 252 |
| 15 | EZAM-400-220-220-81-48 | 90 | 138 | 228 | 376 | 396 | 264 | 218 | 458 | 252 |
| 16 | EZAM-400-220-240-81-40 | 90 | 140 | 230 | 378 | 398 | 284 | 218 | 478 | 272 |
| 17 | EZAM-400-220-240-88-50 | 90 | 145 | 235 | 383 | 403 | 284 | 218 | 478 | 272 |
| 18 | EZAM-400-220-220-70-52 | 90 | 129 | 219 | 367 | 387 | 264 | 218 | 458 | 252 |
| 19 | EZAM-400-220-210-60-53 | 90 | 117 | 207 | 355 | 375 | 254 | 218 | 448 | 242 |
| 20 | EZAM-400-220-220-90-55 | 90 | 149 | 239 | 387 | 407 | 264 | 218 | 458 | 252 |
| 21 | EZAM-400-220-220-79-56 | 90 | 136 | 226 | 374 | 394 | 264 | 218 | 458 | 252 |
| 22 | EZAM-400-220-220-73-63 | 90 | 132 | 222 | 370 | 390 | 264 | 218 | 458 | 252 |
| 23 | EZAM-800-90-215-93-45 | 90 | 150 | 240 | 388 | 408 | 259 | 218 | 453 | 247 |
| 24 | EZAM-800-175-215-60-98 | 90 | 119 | 209 | 357 | 377 | 259 | 218 | 453 | 247 |
| 25 | EZAM-800-175-215-63-109 | 90 | 120 | 210 | 358 | 378 | 259 | 218 | 453 | 247 |
| 26 | EZAM-800-220-220-97-132 | 90 | 156 | 246 | 394 | 414 | 264 | 218 | 458 | 252 |
| 27 | EZAM-800-220-220-77-135 | 90 | 134 | 224 | 372 | 392 | 264 | 218 | 458 | 252 |
| 28 | EZAM-800-220-240-115-137 | 90 | 174 | 264 | 412 | 432 | 284 | 218 | 478 | 272 |
| 29 | EZAM-800-220-220-77-137 | 90 | 134 | 224 | 372 | 392 | 264 | 218 | 458 | 252 |
| 30 | EZAM-800-250-220-120-141 | 90 | 179 | 269 | 417 | 437 | 264 | 218 | 458 | 252 |
| 31 | EZAM-800-275-240-115-146 | 90 | 172 | 262 | 410 | 430 | 284 | 218 | 478 | 272 |
| 32 | EZAM-800-250-220-100-159 | 90 | 159 | 249 | 397 | 417 | 264 | 218 | 458 | 252 |
| 33 | EZAM-800-300-220-140-168 | 90 | 199 | 289 | 437 | 457 | 264 | 218 | 458 | 252 |
| 34 | EZAM-800-450-220-194-265 | 90 | 253 | 343 | 491 | 511 | 264 | 218 | 458 | 252 |

**KEY FEATURES:**

- PARK LOCK BLDC DRIVE , MAX STATIC LOADING 2.5 TONS/CLASS
- AIR BREATHER AND RELEASE NUT
- A 3-PHASE 8 POLES PERMANENT MAGNET MOTOR
- 7:1 TO 9.5:1 GEAR RATIO
- OPEN DIFFERENTIAL
- IP6K9K SEALING
- INTEGRAETD OIL COOLING SYSTEM
- A VR RESOLVER
- AMPSEALED LV TERMINALS
- CUSTOM HV TERMINALS
- NTC / RTD FOR THERMAL PROTECTION
- BEARING ISO 492 CLASS 2,4,AND 6
- SEALING PER ISO 60529 UP TO IP6K9K

- INSULATION NEMA CLASSES: B, H, 220 [C]
- AL HOUSING –ANODIZED
- HIGH STRENGTH SHAFT –PASSIVATED
- ANNEALED LAMINATION
- CORROSION RESISTANCE ACCESSORIES
- CHEMICAL RESISTANCE SEALS
- ROHS BOM COMPLIANCY
- HARMONIZED AND SCALABLE DESIGN
- PIGTAIL/ TERMINAL ASSY WITH INTERLOCK OPTION
- VIBRATION CLASS V2-V5 PER CUSTOMER NEED
- COOLING SYSTEM NATURALLY COOLED/ WATER JACKET
- VR RESOLVER
- INTERLOCK HV CIRCUIT, AMPSEAL LV TERMINALS

| PERFORMANCE DESCRIPTION | |
|---|---|
| **P1** | MIN DC VOLTAGE FOR FULL PERFORMANCE [V] |
| **P2** | PEAK 10 SEC. CURRENT [A] |
| **P3** | MAX CONTINOUS CURRENT [A] |
| **P4** | MOTOR OD [mm] |
| **P5** | MOTOR STACK LENGTH [mm] |
| **P6** | BASE SPEED-ZPORT HIGH @ MOTOR |
| **P7** | BASE SPEED-ZPORT LOW @ MOTOR |
| **P8** | MAX SPEED ZPORT -LOW@ MOTOR |
| **P9** | PEAK TORQUE [N.m]-ZPORT LOW@ MOTOR |
| **P10** | PEAK TORQUE [N.m]-ZPORT HIGH@ MOTOR |
| **P11** | MAX CONTINOUS TORQUE [N.m] @ MAX SPEED-ZPORT LOW@ MOTOR |
| **P12** | PEAK POWER [KW]-ZPORT LOW@ MOTOR |
| **P13** | PEAK POWER [KW]-ZPORT HIGH@ MOTOR |
| **P14** | MAX CONTINOUS POWER [KW] @ MAX SPEED-ZPORT LOW |
| **P15** | MAX CONTINOUS POWER [KW] @ ABS SPEED-ZPORT LOW |

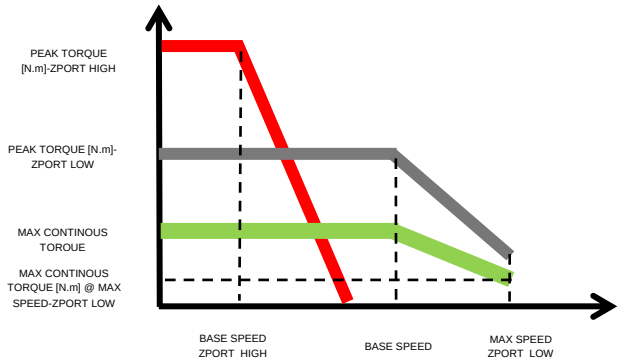


**PERFORMANCE TABLE**

| ORDER | PART # | P1 | P2 | P3 | P4 | P5 | P6 | P7 | P8 | P9 | P10 | P11 | P12 | P13 | P14 | P15 |
|---|---|---|---|---|---|---|---|---|---|---|---|---|---|---|---|---|
| 1 | EZAM-400-125-180-90-31 | 280 | 250 | 125 | 180 | 90 | 2478 | 5700 | 14000 | 103 | 180 | 21 | 61 | 46 | 61 | 31 |
| 2 | EZAM-400-150-215-60-33 | 280 | 300 | 150 | 215 | 60 | 2000 | 4600 | 14000 | 155 | 271 | 23 | 74 | 56 | 74 | 33 |
| 3 | EZAM-400-125-215-60-35 | 280 | 250 | 125 | 215 | 60 | 2043 | 4700 | 14000 | 125 | 219 | 24 | 61 | 46 | 61 | 35 |
| 4 | EZAM-400-125-200-70-35 | 280 | 250 | 125 | 200 | 70 | 2043 | 4700 | 14000 | 130 | 228 | 24 | 64 | 48 | 64 | 35 |
| 5 | EZAM-400-150-220-60-41 | 280 | 300 | 150 | 220 | 60 | 2000 | 4600 | 14000 | 155 | 271 | 28 | 74 | 56 | 74 | 41 |
| 6 | EZAM-400-220-220-87-42 | 280 | 450 | 220 | 220 | 87.5 | 2174 | 5000 | 13500 | 220 | 385 | 30 | 114 | 87 | 114 | 42 |
| 7 | EZAM-400-175-220-68-42 | 280 | 350 | 175 | 210 | 68 | 2130 | 4900 | 14000 | 170 | 298 | 29 | 87 | 66 | 87 | 42 |
| 8 | EZAM-400-220-220-89-45 | 280 | 450 | 220 | 220 | 89 | 2391 | 5500 | 13000 | 230 | 403 | 33 | 132 | 100 | 132 | 45 |
| 9 | EZAM-400-175-215-63-45 | 280 | 350 | 175 | 215 | 63 | 2043 | 4700 | 14000 | 170 | 298 | 31 | 83 | 63 | 83 | 45 |
| 10 | EZAM-400-175-220-60-45 | 280 | 350 | 175 | 220 | 60 | 2000 | 4600 | 14000 | 175 | 306 | 31 | 84 | 64 | 84 | 45 |
| 11 | EZAM-400-220-220-100-46 | 280 | 450 | 220 | 220 | 100 | 2391 | 5500 | 12000 | 220 | 385 | 37 | 126 | 96 | 126 | 46 |
| 12 | EZAM-400-220-220-97-46 | 280 | 450 | 220 | 220 | 97 | 2609 | 6000 | 13500 | 200 | 350 | 33 | 125 | 95 | 125 | 46 |
| 13 | EZAM-400-220-220-90-48 | 280 | 450 | 220 | 220 | 90 | 1630 | 3750 | 14000 | 200 | 350 | 33 | 78 | 59 | 78 | 48 |
| 14 | EZAM-400-220-220-77-48 | 280 | 450 | 220 | 220 | 77 | 2174 | 5000 | 14000 | 220 | 385 | 33 | 114 | 87 | 114 | 48 |
| 15 | EZAM-400-220-220-81-48 | 280 | 450 | 220 | 220 | 81 | 2174 | 5000 | 14000 | 220 | 385 | 33 | 114 | 87 | 114 | 48 |
| 16 | EZAM-400-220-240-81-40 | 280 | 450 | 220 | 240 | 81 | 1304 | 3000 | 12000 | 320 | 560 | 40 | 100 | 76 | 100 | 50 |
| 17 | EZAM-400-220-240-88-50 | 280 | 450 | 220 | 240 | 88 | 1304 | 3000 | 12000 | 320 | 560 | 40 | 100 | 76 | 100 | 50 |
| 18 | EZAM-400-220-220-70-52 | 280 | 450 | 220 | 220 | 70 | 3000 | 7000 | 12500 | 175 | 320 | 40 | 127 | 100 | 127 | 52 |
| 19 | EZAM-400-220-210-60-53 | 280 | 450 | 220 | 210 | 60 | 4000 | 8000 | 12500 | 145 | 250 | 41 | 121 | 104 | 121 | 53 |
| 20 | EZAM-400-220-220-90-55 | 280 | 450 | 220 | 220 | 90 | 1565 | 3600 | 14000 | 270 | 473 | 38 | 101 | 77 | 101 | 55 |
| 21 | EZAM-400-220-220-79-56 | 330 | 450 | 220 | 220 | 79 | 3100 | 9000 | 13500 | 190 | 350 | 40 | 178 | 113 | 178 | 56 |
| 22 | EZAM-400-220-220-73-63 | 280 | 450 | 220 | 220 | 73 | 1870 | 4300 | 14000 | 220 | 385 | 43 | 98 | 75 | 98 | 63 |
| 23 | EZAM-800-90-215-93-45 | 540 | 180 | 90 | 215 | 63 | 1957 | 4500 | 14000 | 180 | 306 | 31 | 84 | 62 | 64 | 45 |
| 24 | EZAM-800-175-215-60-98 | 540 | 350 | 175 | 215 | 60 | 3565 | 8200 | 17500 | 150 | 255 | 54 | 128 | 95 | 112 | 98 |
| 25 | EZAM-800-175-215-63-109 | 540 | 350 | 175 | 215 | 63 | 3957 | 9100 | 17500 | 170 | 289 | 60 | 161 | 119 | 135 | 109 |
| 26 | EZAM-800-220-220-97-132 | 540 | 450 | 220 | 220 | 97 | 3000 | 6000 | 17000 | 320 | 450 | 75 | 199.68 | 140.4 | 166 | 133 |
| 27 | EZAM-800-220-220-77-135 | 540 | 450 | 220 | 220 | 77 | 2609 | 6000 | 17500 | 320 | 544 | 74 | 200 | 148 | 235 | 135 |
| 28 | EZAM-800-220-240-115-137 | 540 | 450 | 220 | 240 | 115 | 1522 | 3500 | 17500 | 450 | 765 | 75 | 164 | 121 | 150 | 137 |
| 29 | EZAM-800-220-220-77-137 | 540 | 450 | 220 | 220 | 77 | 2609 | 6000 | 17500 | 320 | 544 | 75 | 200 | 148 | 168 | 137 |
| 30 | EZAM-800-250-220-120-141 | 540 | 500 | 250 | 220 | 120 | 3700 | 9600 | 17000 | 270 | 520 | 80 | 270 | 200 | 205 | 141 |
| 31 | EZAM-800-275-240-115-146 | 540 | 550 | 275 | 240 | 115 | 1522 | 3500 | 17500 | 510 | 867 | 80 | 186 | 137 | 175 | 146 |
| 32 | EZAM-800-250-220-100-159 | 540 | 500 | 250 | 220 | 100 | 4400 | 11700 | 17000 | 232 | 433 | 90 | 282 | 198 | 220 | 159 |
| 33 | EZAM-800-300-220-140-168 | 540 | 600 | 300 | 220 | 140 | 3700 | 8000 | 17000 | 385 | 780 | 95 | 320 | 300 | 244 | 168 |
| 34 | EZAM-800-450-220-194-265 | 540 | 900 | 450 | 220 | 194 | 6000 | 12000 | 17000 | 630 | 900 | 150 | 786 | 562 | 300 | 265 |

# CHEETAH EDM MODEL-B

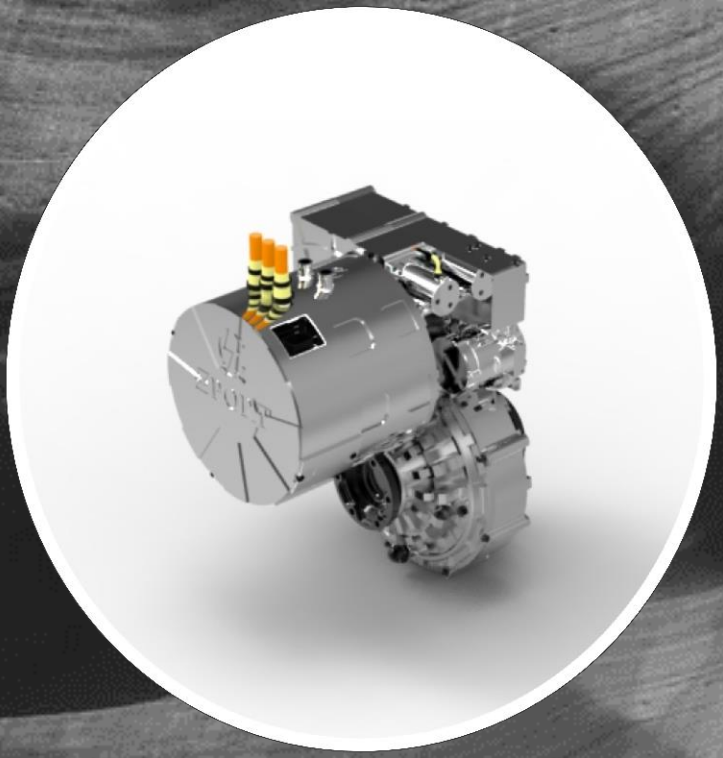

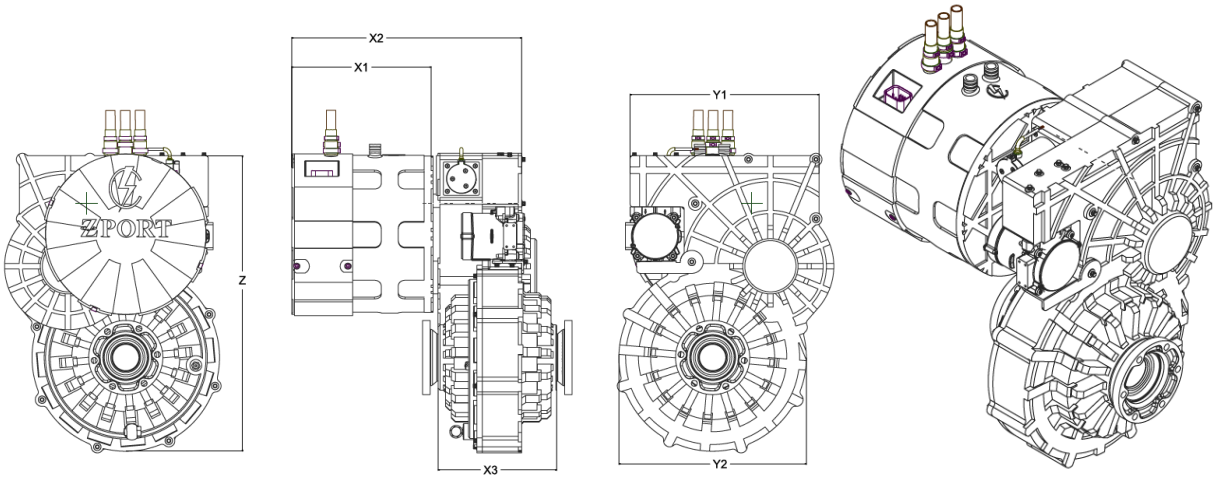


| MODELS | VOLTAGE [VDC] | CONTINOUS CURRENT | ACTIVE MOTOR OD | ACTIVE MOTOR LENGTH | CONTINOUS POWER @ MAX SPEED |
|---|---|---|---|---|---|
| CHEETAH EDM MODEL-B | VDC | A-RMS | [mm] | [mm] | kW |
| EZBM | 260-400/540-800 | 90-450 | 180-240 | 50-200 | 33-265 |

| ORDER | PART NUMBER | L1 [mm] | L2 [mm] | X1 [mm] | X2[mm] | X3[mm] | Y1[mm] | Y2[mm] | Z[mm] | D1 [mm] |
|---|---|---|---|---|---|---|---|---|---|---|
| 1 | EZBM-400-125-180-90-31 | 90 | 149 | 239 | 393 | 195 | 245 | 277 | 403 | 212 |
| 2 | EZBM-400-150-215-60-33 | 90 | 119 | 209 | 363 | 195 | 280 | 277 | 438 | 247 |
| 3 | EZBM-400-125-215-60-35 | 90 | 119 | 209 | 363 | 195 | 280 | 277 | 438 | 247 |
| 4 | EZBM-400-125-200-70-35 | 90 | 129 | 219 | 373 | 195 | 265 | 277 | 423 | 232 |
| 5 | EZBM-400-150-220-60-41 | 90 | 119 | 209 | 363 | 195 | 285 | 277 | 443 | 252 |
| 6 | EZBM-400-220-220-87-42 | 90 | 146 | 236 | 390 | 195 | 285 | 277 | 443 | 252 |
| 7 | EZBM-400-175-220-68-42 | 90 | 125 | 215 | 369 | 195 | 285 | 277 | 443 | 252 |
| 8 | EZBM-400-220-220-89-45 | 90 | 148 | 238 | 392 | 195 | 285 | 277 | 443 | 252 |
| 9 | EZBM-400-175-215-63-45 | 90 | 120 | 210 | 364 | 195 | 280 | 277 | 438 | 247 |
| 10 | EZBM-400-175-220-60-45 | 90 | 119 | 209 | 363 | 195 | 285 | 277 | 443 | 252 |
| 11 | EZBM-400-220-220-100-46 | 90 | 157 | 247 | 401 | 195 | 285 | 277 | 443 | 252 |
| 12 | EZBM-400-220-220-97-46 | 90 | 156 | 246 | 400 | 195 | 285 | 277 | 443 | 252 |
| 13 | EZBM-400-220-220-90-48 | 90 | 147 | 237 | 391 | 195 | 285 | 277 | 443 | 252 |
| 14 | EZBM-400-220-220-77-48 | 90 | 136 | 226 | 380 | 195 | 285 | 277 | 443 | 252 |
| 15 | EZBM-400-220-220-81-48 | 90 | 138 | 228 | 382 | 195 | 285 | 277 | 443 | 252 |
| 16 | EZBM-400-220-240-81-50 | 90 | 140 | 230 | 384 | 195 | 305 | 277 | 463 | 272 |
| 17 | EZBM-400-220-240-88-50 | 90 | 145 | 235 | 389 | 195 | 305 | 277 | 463 | 272 |
| 18 | EZBM-400-220-220-70-52 | 90 | 129 | 219 | 373 | 195 | 285 | 277 | 443 | 252 |
| 19 | EZBM-400-220-210-60-53 | 90 | 117 | 207 | 361 | 195 | 275 | 277 | 433 | 242 |
| 20 | EZBM-400-220-220-90-55 | 90 | 149 | 239 | 393 | 195 | 285 | 277 | 443 | 252 |
| 21 | EZBM-400-220-220-79-56 | 90 | 136 | 226 | 380 | 195 | 285 | 277 | 443 | 252 |
| 22 | EZBM-400-220-220-73-63 | 90 | 132 | 222 | 376 | 195 | 285 | 277 | 443 | 252 |
| 23 | EZBM-800-90-215-93-45 | 90 | 150 | 240 | 394 | 195 | 280 | 277 | 438 | 247 |
| 24 | EZBM-800-175-215-60-98 | 90 | 119 | 209 | 363 | 195 | 280 | 277 | 438 | 247 |
| 25 | EZBM-800-175-215-63-109 | 90 | 120 | 210 | 364 | 195 | 280 | 277 | 438 | 247 |
| 26 | EZBM-800-220-220-97-132 | 90 | 156 | 246 | 400 | 195 | 285 | 277 | 443 | 252 |
| 27 | EZBM-800-220-220-77-135 | 90 | 134 | 224 | 378 | 195 | 285 | 277 | 443 | 252 |
| 28 | EZBM-800-220-240-115-137 | 90 | 174 | 264 | 418 | 195 | 305 | 277 | 463 | 272 |
| 29 | EZBM-800-220-220-77-137 | 90 | 134 | 224 | 378 | 195 | 285 | 277 | 443 | 252 |
| 30 | EZBM-800-250-220-120-141 | 90 | 179 | 269 | 423 | 195 | 285 | 277 | 443 | 252 |
| 31 | EZBM-800-275-240-115-146 | 90 | 172 | 262 | 416 | 195 | 305 | 277 | 463 | 272 |
| 32 | EZBM-800-250-220-100-159 | 90 | 159 | 249 | 403 | 195 | 285 | 277 | 443 | 252 |
| 33 | EZBM-800-300-220-140-168 | 90 | 199 | 289 | 443 | 195 | 285 | 277 | 443 | 252 |
| 34 | EZBM-800-450-220-194-265 | 90 | 253 | 343 | 497 | 195 | 285 | 277 | 443 | 252 |

**KEY FEATURES:**

- PARK LOCK BLDC DRIVE , MAX STATIC LOADING 2.5 TONS
- AIR BREATHER AND RELEASE NUT
- A 3-PHASE 8 POLES PERMANENT MAGNET MOTOR
- 7:1 TO 9.5:1 GEAR RATIO
- OPEN DIFFERENTIAL
- IP6K9K SEALING
- INTEGRAETD OIL COOLING SYSTEM
- A VR RESOLVER
- AMPSEALED LV TERMINALS
- CUSTOM HV TERMINALS
- NTC / RTD FOR THERMAL PROTECTION
- BEARING ISO 492 CLASS 2,4,AND 6

- SEALING PER ISO 60529 UP TO IP6K9K
- INSULATION NEMA CLASSES: B, H, 220 [C]
- AL HOUSING –ANODIZED
- HIGH STRENGTH SHAFT –PASSIVATED
- ANNEALED LAMINATION
- CORROSION RESISTANCE ACCESSORIES
- CHEMICAL RESISTANCE SEALS
- ROHS BOM COMPLIANCY
- HARMONIZED AND SCALABLE DESIGN
- PIGTAIL/ TERMINAL ASSY WITH INTERLOCK OPTION
- VIBRATION CLASS V2-V5 PER CUSTOMER NEED
- COOLING SYSTEM NATURALLY COOLED/ WATER JACKET
- VR RESOLVER
- INTERLOCK HV CIRCUIT , AMPSEAL LV TERMINALS

**PERFORMANCE DESCRIPTION**

| | |
|---|---|
| **P1** | MIN DC VOLTAGE FOR FULL PERFORMANCE [V] |
| **P2** | PEAK 10 SEC. CURRENT [A] |
| **P3** | MAX CONTINOUS CURRENT [A] |
| **P4** | MOTOR OD [mm] |
| **P5** | MOTOR STACK LENGTH [mm] |
| **P6** | BASE SPEED-ZPORT HIGH @ MOTOR |
| **P7** | BASE SPEED-ZPORT LOW @ MOTOR |
| **P8** | MAX SPEED ZPORT -LOW@ MOTOR |
| **P9** | PEAK TORQUE [N.m]-ZPORT LOW@ MOTOR |
| **P10** | PEAK TORQUE [N.m]-ZPORT HIGH@ MOTOR |
| **P11** | MAX CONTINOUS TORQUE [N.m] @ MAX SPEED-ZPORT LOW@ MOTOR |
| **P12** | PEAK POWER [KW]-ZPORT LOW@ MOTOR |
| **P13** | PEAK POWER [KW]-ZPORT HIGH@ MOTOR |
| **P14** | MAX CONTINOUS POWER [KW] @ MAX SPEED-ZPORT LOW |
| **P15** | MAX CONTINOUS POWER [KW] @ ABS SPEED-ZPORT LOW |

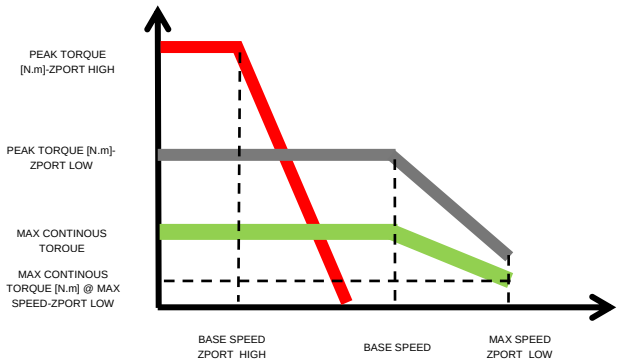


**PERFORMANCE TABLE**

| | | P1 | P2 | P3 | P4 | P5 | P6 | P7 | P8 | P9 | P10 | P11 | P12 | P13 | P14 | P15 |
|---|---|---|---|---|---|---|---|---|---|---|---|---|---|---|---|---|
| 1 | EZBM-400-125-180-90-31 | 280 | 250 | 125 | 180 | 90 | 2478 | 5700 | 14000 | 103 | 180 | 21 | 61 | 46 | 61 | 31 |
| 2 | EZBM-400-150-215-60-33 | 280 | 300 | 150 | 215 | 60 | 2000 | 4600 | 14000 | 155 | 271 | 23 | 74 | 56 | 74 | 33 |
| 3 | EZBM-400-125-215-60-35 | 280 | 250 | 125 | 215 | 60 | 2043 | 4700 | 14000 | 125 | 219 | 24 | 61 | 46 | 61 | 35 |
| 4 | EZBM-400-125-200-70-35 | 280 | 250 | 125 | 200 | 70 | 2043 | 4700 | 14000 | 130 | 228 | 24 | 64 | 48 | 64 | 35 |
| 5 | EZBM-400-150-220-60-41 | 280 | 300 | 150 | 220 | 60 | 2000 | 4600 | 14000 | 155 | 271 | 28 | 74 | 56 | 74 | 41 |
| 6 | EZBM-400-220-220-87-42 | 280 | 450 | 220 | 220 | 87.5 | 2174 | 5000 | 13500 | 220 | 385 | 30 | 114 | 87 | 114 | 42 |
| 7 | EZBM-400-175-220-68-42 | 280 | 350 | 175 | 210 | 68 | 2130 | 4900 | 14000 | 170 | 298 | 29 | 87 | 66 | 87 | 42 |
| 8 | EZBM-400-220-220-89-45 | 280 | 450 | 220 | 220 | 89 | 2391 | 5500 | 13000 | 230 | 403 | 33 | 132 | 100 | 132 | 45 |
| 9 | EZBM-400-175-215-63-45 | 280 | 350 | 175 | 215 | 63 | 2043 | 4700 | 14000 | 170 | 298 | 31 | 83 | 63 | 83 | 45 |
| 10 | EZBM-400-175-220-60-45 | 280 | 350 | 175 | 220 | 60 | 2000 | 4600 | 14000 | 175 | 306 | 31 | 84 | 64 | 84 | 45 |
| 11 | EZBM-400-220-220-100-46 | 280 | 450 | 220 | 220 | 100 | 2391 | 5500 | 12000 | 220 | 385 | 37 | 126 | 96 | 126 | 46 |
| 12 | EZBM-400-220-220-97-46 | 280 | 450 | 220 | 220 | 97 | 2609 | 6000 | 13500 | 200 | 350 | 33 | 125 | 95 | 125 | 46 |
| 13 | EZBM-400-220-220-90-48 | 280 | 450 | 220 | 220 | 90 | 1630 | 3750 | 14000 | 200 | 350 | 33 | 78 | 59 | 78 | 48 |
| 14 | EZBM-400-220-220-77-48 | 280 | 450 | 220 | 220 | 77 | 2174 | 5000 | 14000 | 220 | 385 | 33 | 114 | 87 | 114 | 48 |
| 15 | EZBM-400-220-220-81-48 | 280 | 450 | 220 | 220 | 81 | 2174 | 5000 | 14000 | 220 | 385 | 33 | 114 | 87 | 114 | 48 |
| 16 | EZBM-400-220-240-81-50 | 280 | 450 | 220 | 240 | 81 | 1304 | 3000 | 12000 | 320 | 560 | 40 | 100 | 76 | 100 | 50 |
| 17 | EZBM-400-220-240-88-50 | 280 | 450 | 220 | 240 | 88 | 1304 | 3000 | 12000 | 320 | 560 | 40 | 100 | 76 | 100 | 50 |
| 18 | EZBM-400-220-220-70-52 | 280 | 450 | 220 | 220 | 70 | 3000 | 7000 | 12500 | 175 | 320 | 40 | 127 | 100 | 127 | 52 |
| 19 | EZBM-400-220-210-60-53 | 280 | 450 | 220 | 210 | 60 | 4000 | 8000 | 12500 | 145 | 250 | 41 | 121 | 104 | 121 | 53 |
| 20 | EZBM-400-220-220-90-55 | 280 | 450 | 220 | 220 | 90 | 1565 | 3600 | 14000 | 270 | 473 | 38 | 101 | 77 | 101 | 55 |
| 21 | EZBM-400-220-220-79-56 | 330 | 450 | 220 | 220 | 79 | 3100 | 9000 | 13500 | 190 | 350 | 40 | 178 | 113 | 178 | 56 |
| 22 | EZBM-400-220-220-73-63 | 280 | 450 | 220 | 220 | 73 | 1870 | 4300 | 14000 | 220 | 385 | 43 | 98 | 75 | 98 | 63 |
| 23 | EZBM-800-90-215-93-45 | 540 | 180 | 90 | 215 | 63 | 1957 | 4500 | 14000 | 180 | 306 | 31 | 84 | 62 | 64 | 45 |
| 24 | EZBM-800-175-215-60-98 | 540 | 350 | 175 | 215 | 60 | 3565 | 8200 | 17500 | 150 | 255 | 54 | 128 | 95 | 112 | 98 |
| 25 | EZBM-800-175-215-63-109 | 540 | 350 | 175 | 215 | 63 | 3957 | 9100 | 17500 | 170 | 289 | 60 | 161 | 119 | 135 | 109 |
| 26 | EZBM-800-220-220-97-132 | 540 | 450 | 220 | 220 | 97 | 3000 | 6000 | 17000 | 320 | 450 | 75 | 199 | 140 | 166 | 133 |
| 27 | EZBM-800-220-220-77-135 | 540 | 450 | 220 | 220 | 77 | 2609 | 6000 | 17500 | 320 | 544 | 74 | 200 | 148 | 235 | 135 |
| 28 | EZBM-800-220-240-115-137 | 540 | 450 | 220 | 240 | 115 | 1522 | 3500 | 17500 | 450 | 765 | 75 | 164 | 121 | 150 | 137 |
| 29 | EZBM-800-220-220-77-137 | 540 | 450 | 220 | 220 | 77 | 2609 | 6000 | 17500 | 320 | 544 | 75 | 200 | 148 | 168 | 137 |
| 30 | EZBM-800-250-220-120-141 | 540 | 500 | 250 | 220 | 120 | 3700 | 9600 | 17000 | 270 | 520 | 80 | 270 | 200 | 205 | 141 |
| 31 | EZBM-800-275-240-115-146 | 540 | 550 | 275 | 240 | 115 | 1522 | 3500 | 17500 | 510 | 867 | 80 | 186 | 137 | 175 | 146 |
| 32 | EZBM-800-250-220-100-159 | 540 | 500 | 250 | 220 | 100 | 4400 | 11700 | 17000 | 232 | 433 | 90 | 282 | 198 | 220 | 159 |
| 33 | EZBM-800-300-220-140-168 | 540 | 600 | 300 | 220 | 140 | 3700 | 8000 | 17000 | 385 | 780 | 95 | 320 | 300 | 244 | 168 |
| 34 | EZBM-800-450-220-194-265 | 540 | 900 | 450 | 220 | 194 | 6000 | 12000 | 17000 | 630 | 900 | 150 | 786 | 562 | 300 | 265 |

# CHEETAH EDM
# MODEL-C

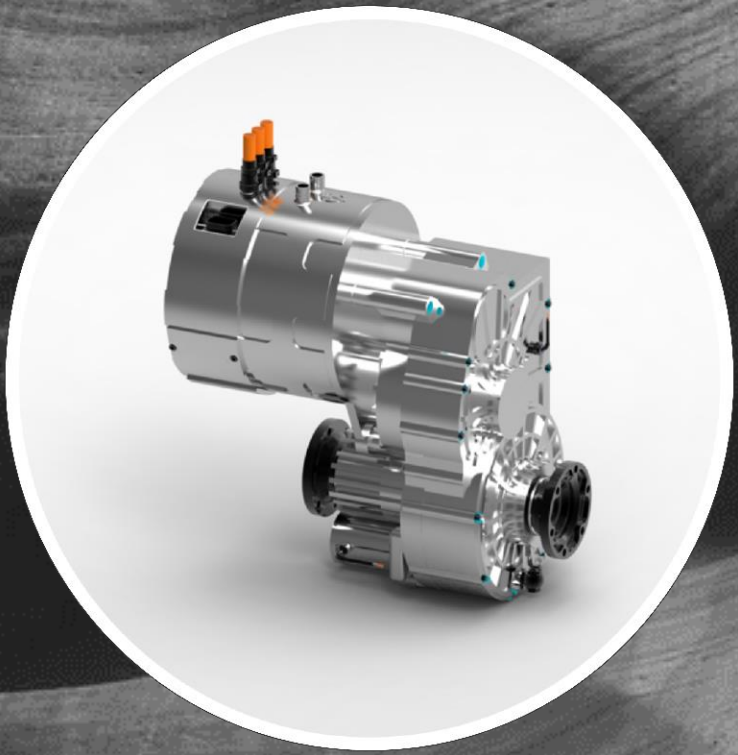

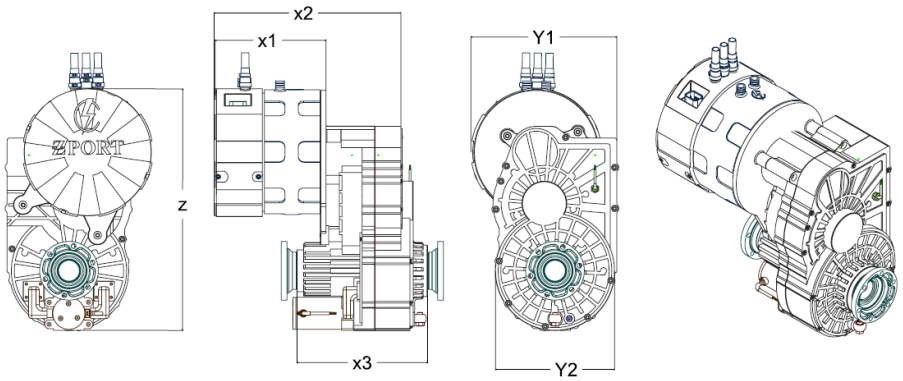


| MODELS | VOLTAGE [VDC] | CONTINOUS CURRENT | ACTIVE MOTOR OD | ACTIVE MOTOR LENGTH | CONTINOUS POWER @ MAX SPEED |
|---|---|---|---|---|---|
| CHEETAH EDM MODEL-C | VDC | A-RMS | [mm] | [mm] | kW |
| EZCM | 260-400/540-800 | 90-450 | 180-240 | 50-200 | 33-265 |

| ORDER | PART NUMBER | L1 [mm] | L2 [mm] | X1 [MM] | X2[mm] | X3[mm] | Y1[mm] | Y2[mm] | Z[mm] | D1 [mm] |
|---|---|---|---|---|---|---|---|---|---|---|
| 1 | EZCM-400-125-180-90-31 | 68 | 147 | 237 | 399 | 285 | 239 | 223 | 391 | 212 |
| 2 | EZCM-400-150-215-60-33 | 68 | 117 | 207 | 369 | 285 | 274 | 223 | 453 | 247 |
| 3 | EZCM-400-125-215-60-35 | 68 | 117 | 207 | 369 | 285 | 274 | 223 | 453 | 247 |
| 4 | EZCM-400-125-200-70-35 | 68 | 127 | 217 | 379 | 285 | 259 | 223 | 438 | 232 |
| 5 | EZCM-400-150-220-60-41 | 68 | 117 | 207 | 369 | 285 | 279 | 223 | 458 | 252 |
| 6 | EZCM-400-220-220-87-42 | 68 | 144 | 234 | 396 | 285 | 279 | 223 | 458 | 252 |
| 7 | EZCM-400-175-220-68-42 | 68 | 125 | 215 | 377 | 285 | 279 | 223 | 458 | 252 |
| 8 | EZCM-400-220-220-89-45 | 68 | 146 | 236 | 398 | 285 | 279 | 223 | 458 | 252 |
| 9 | EZCM-400-175-215-63-45 | 68 | 120 | 210 | 372 | 285 | 274 | 223 | 453 | 247 |
| 10 | EZCM-400-175-220-60-45 | 68 | 117 | 207 | 369 | 285 | 279 | 223 | 458 | 252 |
| 11 | EZCM-400-220-220-100-46 | 68 | 157 | 247 | 409 | 285 | 279 | 223 | 458 | 252 |
| 12 | EZCM-400-220-220-97-46 | 68 | 154 | 244 | 406 | 285 | 279 | 223 | 458 | 252 |
| 13 | EZCM-400-220-220-90-48 | 68 | 147 | 237 | 399 | 285 | 279 | 223 | 458 | 252 |
| 14 | EZCM-400-220-220-77-48 | 68 | 134 | 224 | 386 | 285 | 279 | 223 | 458 | 252 |
| 15 | EZCM-400-220-220-81-48 | 68 | 138 | 228 | 390 | 285 | 279 | 223 | 458 | 252 |
| 16 | EZCM-400-220-240-81-50 | 68 | 138 | 228 | 390 | 285 | 299 | 223 | 478 | 272 |
| 17 | EZCM-400-220-240-88-50 | 68 | 145 | 235 | 397 | 285 | 299 | 223 | 478 | 272 |
| 18 | EZCM-400-220-220-70-52 | 68 | 127 | 217 | 379 | 285 | 279 | 223 | 458 | 252 |
| 19 | EZCM-400-220-210-60-52 | 68 | 117 | 207 | 369 | 285 | 269 | 223 | 448 | 242 |
| 20 | EZCM-400-220-220-90-55 | 68 | 147 | 237 | 399 | 285 | 279 | 223 | 458 | 252 |
| 21 | EZCM-400-220-220-79-56 | 68 | 136 | 226 | 388 | 285 | 279 | 223 | 458 | 252 |
| 22 | EZCM-400-220-220-73-63 | 68 | 130 | 220 | 382 | 285 | 279 | 223 | 458 | 252 |
| 23 | EZCM-800-90-215-93-45 | 68 | 150 | 240 | 402 | 285 | 274 | 223 | 453 | 247 |
| 24 | EZCM-800-175-215-60-98 | 68 | 117 | 207 | 369 | 285 | 274 | 223 | 453 | 247 |
| 25 | EZCM-800-175-215-63-109 | 68 | 120 | 210 | 372 | 285 | 274 | 223 | 453 | 247 |
| 26 | EZCM-800-220-220-97-132 | 68 | 154 | 244 | 406 | 285 | 279 | 223 | 458 | 252 |
| 27 | EZCM-800-220-220-77-135 | 68 | 134 | 224 | 386 | 285 | 279 | 223 | 458 | 252 |
| 28 | EZCM-800-220-240-115-137 | 68 | 172 | 262 | 424 | 285 | 299 | 223 | 478 | 272 |
| 29 | EZCM-800-220-220-77-137 | 68 | 134 | 224 | 386 | 285 | 279 | 223 | 458 | 252 |
| 30 | EZCM-800-250-220-120-141 | 68 | 177 | 267 | 429 | 285 | 279 | 223 | 458 | 252 |
| 31 | EZCM-800-275-240-115-146 | 68 | 172 | 262 | 424 | 285 | 299 | 223 | 478 | 272 |
| 32 | EZCM-800-250-220-100-159 | 68 | 157 | 247 | 409 | 285 | 279 | 223 | 458 | 252 |
| 33 | EZCM-800-300-220-140-168 | 68 | 197 | 287 | 449 | 285 | 279 | 223 | 458 | 252 |
| 34 | EZCM-800-450-220-194-265 | 68 | 251 | 341 | 503 | 285 | 279 | 223 | 458 | 252 |

**KEY FEATURES:**

- PARK LOCK BLDC DRIVE , MAX STATIC LOADING 2.5 TONS/CLASS
- AIR BREATHER AND OIL RELEASE NUT
- GUIDED OIL CHANNELS
- A 3-PHASE 8 POLES PERMANENT MAGNET MOTOR
- 7:1 TO 9.5:1 GEAR RATIO
- CUSTOM OPEN DIFFERENTIAL
- INTEGRAETD OIL COOLING SYSTEM
- A VR RESOLVER
- AMPSEALED LV TERMINALS
- CUSTOM HV TERMINALS
- NTC / RTD FOR THERMAL PROTECTION
- DEEP GRROVE AND TAPERED ROLLER BEARING ISO 492 CLASS 2,4,AND 6
- SEALING PER ISO 60529 UP TO IP6K9K
- INSULATION NEMA CLASSES: B, H, 220 [C]
- AL HOUSING –ANODIZED
- HIGH STRENGTH SHAFT –PASSIVATED

- ANNEALED LAMINATION
- CORROSION RESISTANCE ACCESSORIES
- CHEMICAL AND OIL RESISTANCE SEALS
- ROHS BOM COMPLIANCY
- HARMONIZED AND SCALABLE DESIGN
- PIGTAIL/ TERMINAL ASSY
- VIBRATION CLASS V2-V5 PER CUSTOMER NEED
- COOLING SYSTEM NATURALLY COOLED/ WATER JACKET
- INTERLOCK HV CIRCUIT
- AMPSEAL LV TERMINALS

| PERFORMANCE DESCRIPTION | |
|---|---|
| P1 | MIN DC VOLTAGE FOR FULL PERFORMANCE [V] |
| P2 | PEAK 10 SEC. CURRENT [A] |
| P3 | MAX CONTINOUS CURRENT [A] |
| P4 | MOTOR OD [mm] |
| P5 | MOTOR STACK LENGTH [mm] |
| P6 | BASE SPEED-ZPORT HIGH @ MOTOR |
| P7 | BASE SPEED-ZPORT LOW @ MOTOR |
| P8 | MAX SPEED ZPORT -LOW@ MOTOR |
| P9 | PEAK TORQUE [N.m]-ZPORT LOW@ MOTOR |
| P10 | PEAK TORQUE [N.m]-ZPORT HIGH@ MOTOR |
| P11 | MAX CONTINOUS TORQUE [N.m] @ MAX SPEED-ZPORT LOW@ MOTOR |
| P12 | PEAK POWER [KW]-ZPORT LOW@ MOTOR |
| P13 | PEAK POWER [KW]-ZPORT HIGH@ MOTOR |
| P14 | MAX CONTINOUS POWER [KW] @ MAX SPEED-ZPORT LOW |
| P15 | MAX CONTINOUS POWER [KW] @ ABS SPEED-ZPORT LOW |

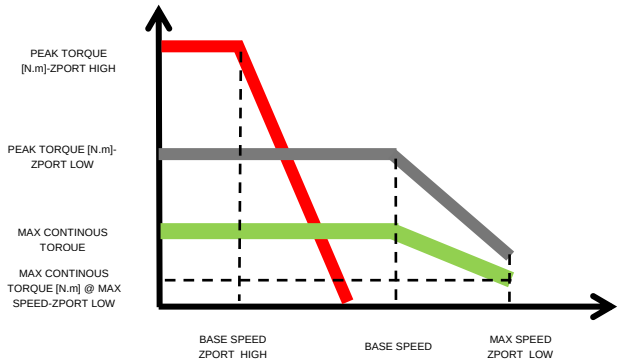


**PERFORMANCE TABLE**

| ORDER | PART NUMBER | P1 | P2 | P3 | P4 | P5 | P6 | P7 | P8 | P9 | P10 | P11 | P12 | P13 | P14 | P15 |
|---|---|---|---|---|---|---|---|---|---|---|---|---|---|---|---|---|
| 1 | EZCM-400-125-180-90-31 | 280 | 250 | 125 | 180 | 90 | 2478 | 5700 | 14000 | 103 | 180 | 21 | 61 | 46 | 61 | 31 |
| 2 | EZCM-400-150-215-60-33 | 280 | 300 | 150 | 215 | 60 | 2000 | 4600 | 14000 | 155 | 271 | 23 | 74 | 56 | 74 | 33 |
| 3 | EZCM-400-125-215-60-35 | 280 | 250 | 125 | 215 | 60 | 2043 | 4700 | 14000 | 125 | 219 | 24 | 61 | 46 | 61 | 35 |
| 4 | EZCM-400-125-200-70-35 | 280 | 250 | 125 | 200 | 70 | 2043 | 4700 | 14000 | 130 | 228 | 24 | 64 | 48 | 64 | 35 |
| 5 | EZCM-400-150-220-60-41 | 280 | 300 | 150 | 220 | 60 | 2000 | 4600 | 14000 | 155 | 271 | 28 | 74 | 56 | 74 | 41 |
| 6 | EZCM-400-220-220-87-42 | 280 | 450 | 220 | 220 | 87.5 | 2174 | 5000 | 13500 | 220 | 385 | 30 | 114 | 87 | 114 | 42 |
| 7 | EZCM-400-175-220-68-42 | 280 | 350 | 175 | 210 | 68 | 2130 | 4900 | 14000 | 170 | 298 | 29 | 87 | 66 | 87 | 42 |
| 8 | EZCM-400-220-220-89-45 | 280 | 450 | 220 | 220 | 89 | 2391 | 5500 | 13000 | 230 | 403 | 33 | 132 | 100 | 132 | 45 |
| 9 | EZCM-400-175-215-63-45 | 280 | 350 | 175 | 215 | 63 | 2043 | 4700 | 14000 | 170 | 298 | 31 | 83 | 63 | 83 | 45 |
| 10 | EZCM-400-175-220-60-45 | 280 | 350 | 175 | 220 | 60 | 2000 | 4600 | 14000 | 175 | 306 | 31 | 84 | 64 | 84 | 45 |
| 11 | EZCM-400-220-220-100-46 | 280 | 450 | 220 | 220 | 100 | 2391 | 5500 | 12000 | 220 | 385 | 37 | 126 | 96 | 126 | 46 |
| 12 | EZCM-400-220-220-97-46 | 280 | 450 | 220 | 220 | 97 | 2609 | 6000 | 13500 | 200 | 350 | 33 | 125 | 95 | 125 | 46 |
| 13 | EZCM-400-220-220-90-48 | 280 | 450 | 220 | 220 | 90 | 1630 | 3750 | 14000 | 200 | 350 | 33 | 78 | 59 | 78 | 48 |
| 14 | EZCM-400-220-220-77-48 | 280 | 450 | 220 | 220 | 77 | 2174 | 5000 | 14000 | 220 | 385 | 33 | 114 | 87 | 114 | 48 |
| 15 | EZCM-400-220-220-81-48 | 280 | 450 | 220 | 220 | 81 | 2174 | 5000 | 14000 | 220 | 385 | 33 | 114 | 87 | 114 | 48 |
| 16 | EZCM-400-220-240-81-50 | 280 | 450 | 220 | 240 | 81 | 1304 | 3000 | 12000 | 320 | 560 | 40 | 100 | 76 | 100 | 50 |
| 17 | EZCM-400-220-240-88-50 | 280 | 450 | 220 | 240 | 88 | 1304 | 3000 | 12000 | 320 | 560 | 40 | 100 | 76 | 100 | 50 |
| 18 | EZCM-400-220-220-70-52 | 280 | 450 | 220 | 220 | 70 | 3000 | 7000 | 12500 | 175 | 320 | 40 | 127 | 100 | 127 | 52 |
| 19 | EZCM-400-220-210-60-52 | 280 | 450 | 220 | 210 | 60 | 4000 | 8000 | 12500 | 145 | 250 | 41 | 121 | 104 | 121 | 53 |
| 20 | EZCM-400-220-220-90-55 | 280 | 450 | 220 | 220 | 90 | 1565 | 3600 | 14000 | 270 | 473 | 38 | 101 | 77 | 101 | 55 |
| 21 | EZCM-400-220-220-79-56 | 330 | 450 | 220 | 220 | 79 | 3100 | 9000 | 13500 | 190 | 350 | 40 | 178 | 113 | 178 | 56 |
| 22 | EZCM-400-220-220-73-63 | 280 | 450 | 220 | 220 | 73 | 1870 | 4300 | 14000 | 220 | 385 | 43 | 98 | 75 | 98 | 63 |
| 23 | EZCM-800-90-215-93-45 | 540 | 180 | 90 | 215 | 63 | 1957 | 4500 | 14000 | 180 | 306 | 31 | 84 | 62 | 45 | 45 |
| 24 | EZCM-800-175-215-60-98 | 540 | 350 | 175 | 215 | 60 | 3565 | 8200 | 17500 | 150 | 255 | 54 | 128 | 95 | 64 | 98 |
| 25 | EZCM-800-175-215-63-109 | 540 | 350 | 175 | 215 | 63 | 3957 | 9100 | 17500 | 170 | 289 | 60 | 161 | 119 | 112 | 109 |
| 26 | EZCM-800-220-220-97-132 | 540 | 450 | 220 | 220 | 97 | 3000 | 6000 | 17000 | 320 | 450 | 75 | 199 | 140 | 135 | 133 |
| 27 | EZCM-800-220-220-77-135 | 540 | 450 | 220 | 220 | 77 | 2609 | 6000 | 17500 | 320 | 544 | 74 | 200 | 148 | 166 | 135 |
| 28 | EZCM-800-220-240-115-137 | 540 | 450 | 220 | 240 | 115 | 1522 | 3500 | 17500 | 450 | 765 | 75 | 164 | 121 | 235 | 137 |
| 29 | EZCM-800-220-220-77-137 | 540 | 450 | 220 | 220 | 77 | 2609 | 6000 | 17500 | 320 | 544 | 75 | 200 | 148 | 150 | 137 |
| 30 | EZCM-800-250-220-120-141 | 540 | 500 | 250 | 220 | 120 | 3700 | 9600 | 17000 | 270 | 520 | 80 | 270 | 200 | 168 | 141 |
| 31 | EZCM-800-275-240-115-146 | 540 | 550 | 275 | 240 | 115 | 1522 | 3500 | 17500 | 510 | 867 | 80 | 186 | 137 | 205 | 146 |
| 32 | EZCM-800-250-220-100-159 | 540 | 500 | 250 | 220 | 100 | 4400 | 11700 | 17000 | 232 | 433 | 90 | 282 | 198 | 175 | 159 |
| 33 | EZCM-800-300-220-140-168 | 540 | 600 | 300 | 220 | 140 | 3700 | 8000 | 17000 | 385 | 780 | 95 | 320 | 300 | 220 | 168 |
| 34 | EZCM-800-450-220-194-265 | 540 | 900 | 450 | 220 | 194 | 6000 | 12000 | 17000 | 630 | 900 | 150 | 786 | 562 | 244 | 265 |

# CHEETAH EDM
# MODEL-ALPHA

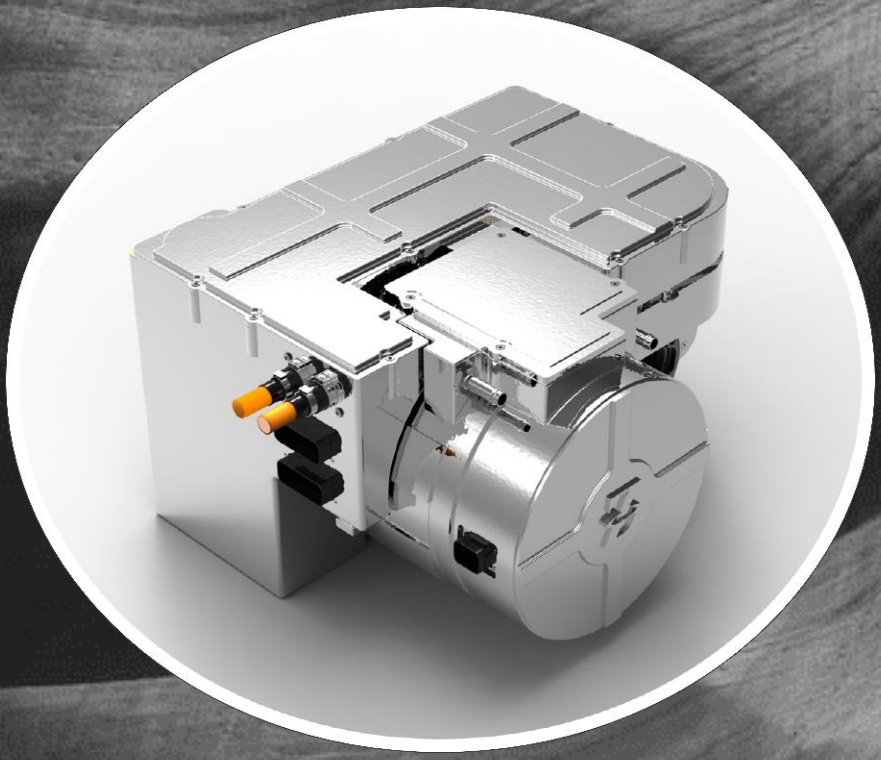

| FRONT AXLE<br>207 kW-4665N.m<br>@ 450-ARMS/560 VDC<br><br>Weight: 89.5 [kg] | REAR AXLE<br>414 kW-9330 N.m<br>@ 450-ARMS/560 VDC<br><br>Weight: 177 [kg] |
|---|---|

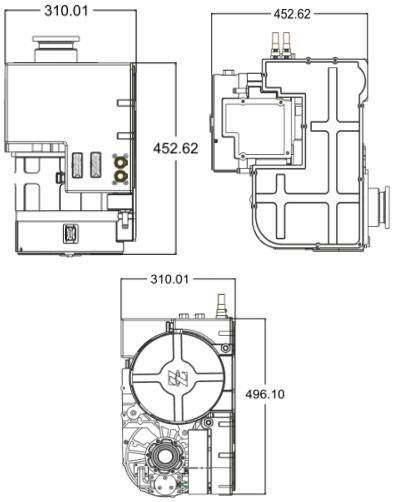


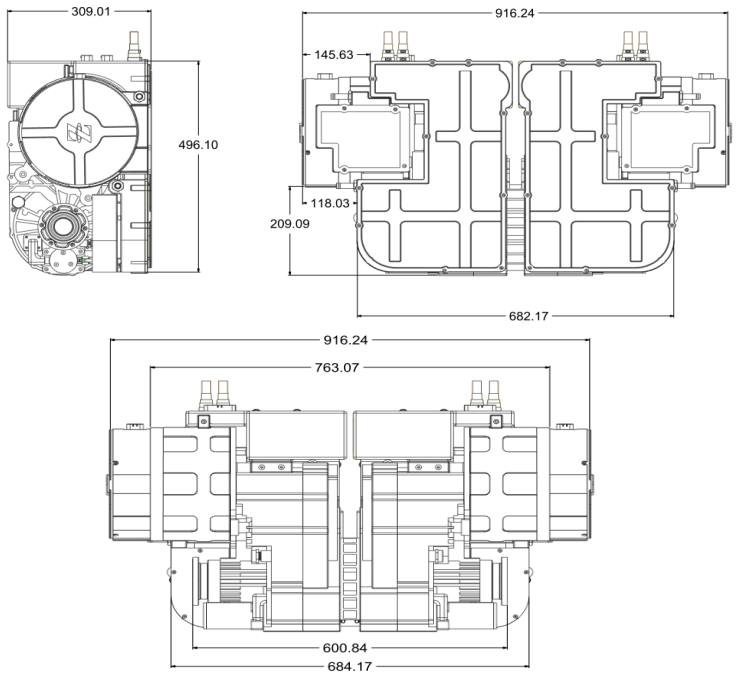


| MIN DC VOLTAGE FOR PERFORMANCE:<br>560 VDC / PEAK 10 SEC. CURRENT 450 A-RMS/ CONTINOUS CURRENT 220 ARMS/ GEAR RATIO: 9.3 | | | | | |
|---|---|---|---|---|---|
| EDM | PEAK 10 SEC. N.m | TOTAL PEAK 10 SEC. kW | CONTINOUS N.m@ MAX EDM SPEED | CONTINOUS kW@ MAX EDM SPEED | MAX EDM OUTPUT RPM |
| FRONT | 4665 | 207 | 666 | 125 | 1876 |
| REAR | 9330 | 414 | 1332 | 250 | 1876 |
| TOTAL [+/-3%] | 14000 | 621 | 1998 | 375 | 1876 |

| System | Weight | Z-PORT® ENABLED E-DRIVE<br>@560 VDC,450 ARMS<br>FRONT:207kW-4500N.m<br>REAR:414kW-9000N.m | **Example: TESLA PLAID DRIVE UNITS**<br>@300VDC, ~1000ARMS<br>FRONT: 205 kW-4040N.m<br>REAR: 410kW-8080 N.m | IMPROVEMENT % |
|---|---|---|---|---|
| FRONT AXLE E-drive | Total weight [kg] | 89.5 | 95.00 | +5.9 |
| | kW/kg | 2.32 | 2.16 | +7.3 |
| | N.m/kg | 50.34 | 42.56 | +18.3 |
| REAR AXLE E-drive | Total weight [kg] | 177 | 190.00 | +6.8 |
| | kW/kg | 2.34 | 2.16 | +8.4 |
| | N.m/kg | 50.84 | 42.56 | +19.5 |

| **EDM** | **GEAR TYPE** | **DIFFERENTIAL** | **DIFFERENTIAL COOLING** | **EXTRA TRANSMISSION COOLING** | **GEAR RATIO** | **MOTOR/CONTROLLER COOLING** |
|---|---|---|---|---|---|---|
| FRONT | CYLINDRICAL-HELICAL | OPEN | TRANSMISSION OIL | DEDICATED CLOSED LOOP HEAT EXCHANGER,5000 BTU/Hr | 9.33=7.18X1.3 | WATER/GLYCOL 50/50 |
| REAR | CYLINDRICAL-PANETARY | OPEN | TRANSMISSION OIL | A-CLOSED LOOP HEAT EXCHANGER,10000 BTU/Hr | 9.33=7.18X1.3 | WATER/GLYCOL 50/50 |

| EDM | OPERATING TEMPERATURE | BEARING MAX ACCELRATION | MOTOR CONTROLLER COOLING [W] | TRANSMISSION OIL PUMP [W] | MAX STATIC LOADING PARK LOCK | PARK LOCK |
|---|---|---|---|---|---|---|
| FRONT | (-40 [C] TO 180 [C]) | 5000 RPM/SEC. | 50 | 60 | 60KN.m | ELECTRICAL BLDC |
| REAR | (-40 [C] TO 180 [C]) | 5000 RPM/SEC. | 100 | 120 | NA | NA |

| EDM | AIR BREATHER | SEALING | MAX STATIC PRESSURE | MOTOR TYPE | DEDICATED HEAT EXCHANGER | PARK LOCK |
|---|---|---|---|---|---|---|
| FRONT | (-40 [C] TO 180 [C]) | IP6K9K | 7 bar | INTERIOR PM, 8 POLES, STRANDED/HAIRPIN | 5000 btu/Hr. | ELECTRICAL BLDC |
| REAR | (-40 [C] TO 180 [C]) | IP6K9K | 7 bar | INTERIOR PM, 8 POLES, STRANDED/HAIRPIN | 10000 btu.Hr. | NA |

| Front Axle- OUTPUTS | Rear Axle-OUTPUTS |
|---|---|

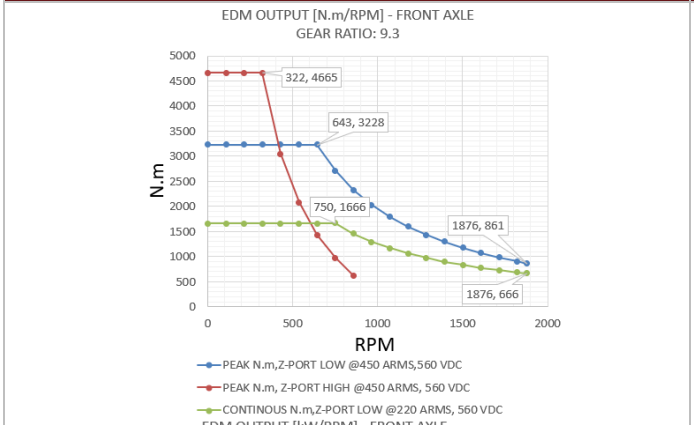


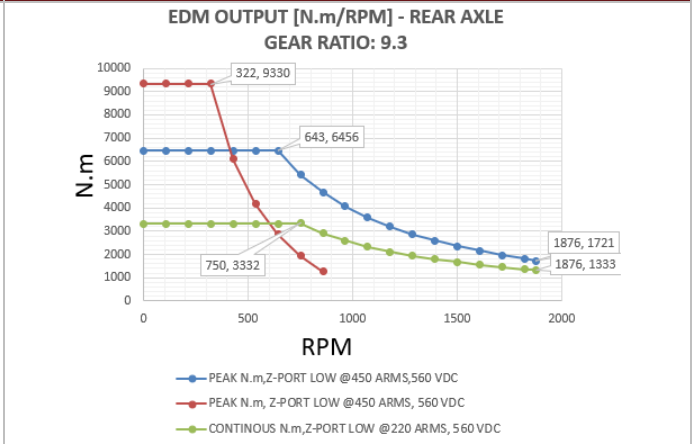


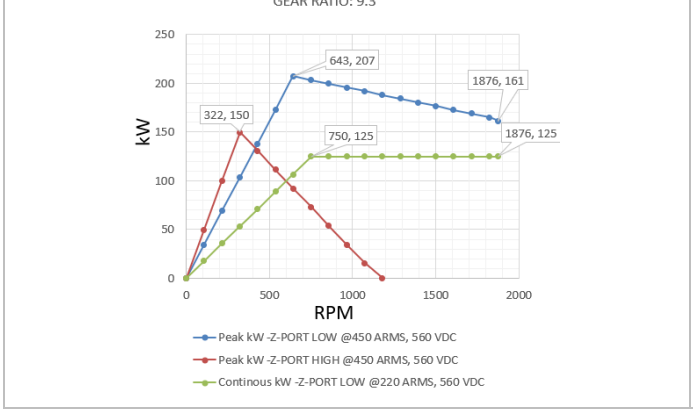


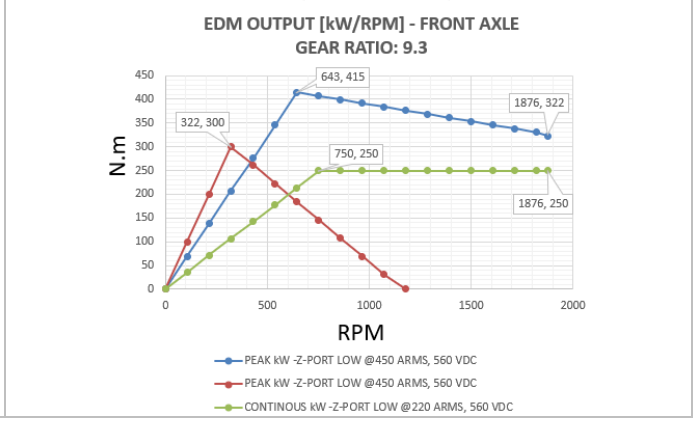


**KEY FEATURES:**

- 800V INVERTER
- 800 V INTEGRATED Z-PORT
- 800V IPM MOTOR [HAIRPIN/STRANDED WIRE]
- PARK LOCK BLDC DRIVE , MAX STATIC LOADING 2.5 TONS
- AIR BREATHER AND RELEASE NUT
- A 3-PHASE 8 POLES PERMANENT MAGNET MOTOR
- 7:1 TO 9.5:1 GEAR RATIO
- OPEN DIFFERENTIAL 1.3:1/1.4:1
- IP6K9K SEALING
- INTEGRAETD OIL COOLING SYSTEM
- A VR RESOLVER
- AMPSEALED LV TERMINALS
- CUSTOM HV TERMINALS
- NTC / RTD FOR THERMAL PROTECTION
- BEARING ISO 492 CLASS 2
- SEALING PER ISO 60529 UP TO IP6K9K
- INSULATION NEMA CLASSES: H, 220 [C]
- AL HOUSING –ANODIZED
- HIGH STRENGTH SHAFT –PASSIVATED
- ANNEALED LAMINATIONS
- CORROSION RESISTANCE ACCESSORIES
- CHEMICAL RESISTANCE SEALS
- ROHS BOM COMPLIANCY
- HARMONIZED AND SCALABLE DESIGN
- PIGTAIL/ TERMINAL ASSY
- VIBRATION CLASS V2-V5 PER CUSTOMER NEED
- COOLING SYSTEM NATURALLY COOLED/ WATER JACKET
- VR RESOLVER
- INTERLOCK HV CIRCUIT
- AMPSEAL LV TERMINALS
- CUSTOM HEAT EXCHANGER

# FRAMELESS BLDC MOTOR

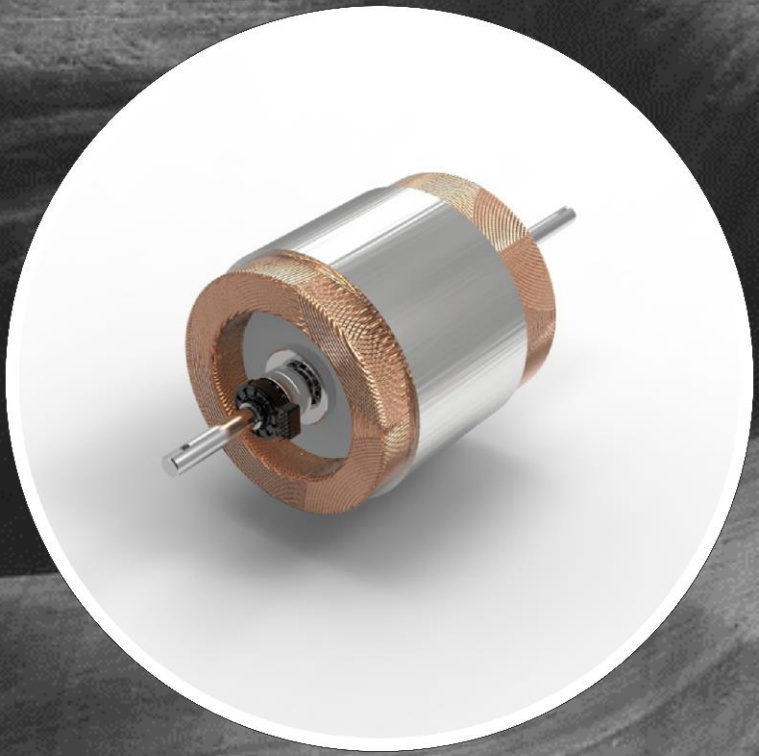

| PART NUMBER DESCRIPTION | | | | | | |
|---|---|---|---|---|---|---|
| VOLTAGE | CURRENT RATING | POWER | MAX SPEED | MAX OPERATING TEMEPRATURE | OUTER DIAMETER | LENGTH |
| VDC | [A-RMS] | kW | KRPM | [C] | [mm] | [mm] |
| H=330-450 VDC, L=42-72 VDC | A1=2, A2=4,A3=8, A4=15, A5=30,A6=60,A7=120,A8=240, A9=480 | W1=0.1,W2=.2,W3=.4,W4=0.75, W5=1.5,W6=3,W7=6,W8=12,W9=24 | R1=3.75,R2=7.5,R3=15,R4=30,R5=60 | B=135 , C=150,H=180,G=200, X=TBD | D1=24, D2=39, D3=54,d3=54,D4=76,d4=76,D5=90,d5=90 | L1=75, L2=80,L3=104, L4=109, L5=120,L6=201 |

| MODEL NUMBER | | OUTER DIAMETER [mm] | ACTIVE LENGTH [mm] | END-END LENGTH [mm] |
|---|---|---|---|---|
| FHA1W1R1HD2L5 | FLA1W1R1HD2L5 | 39 | 80 | 111 |
| FHA1W1R2HD2L2 | FLA1W1R2HD2L2 | 39 | 40 | 71 |
| FHA1W1R3HD1L5 | FLA1W1R3HD1L5 | 24 | 80 | 111 |
| FHA1W1R4HD1L4 | FLA1W1R4HD1L4 | 24 | 64 | 100 |
| FHA1W1R5HD1L1 | FLA1W1R5HD1L1 | 24 | 35 | 66 |
| FHA2W2R1HD3L2 | FLA2W2R1HD3L2 | 54 | 40 | 71 |
| FHA2W2R2HD2L5 | FLA2W2R2HD2L5 | 39 | 80 | 111 |
| FHA2W2R3HD2L2 | FLA2W2R3HD2L2 | 39 | 40 | 71 |
| FHA2W2R4HD1L5 | FLA2W2R4HD1L5 | 24 | 80 | 111 |
| FHA2W2R5HD1L3 | FLA2W2R5HD1L3 | 24 | 69 | 95 |
| FHA2W2R1HD3L5 | FLA2W2R1HD3L5 | 54 | 80 | 111 |
| FHA3W3R2HD3L2 | FLA3W3R2HD3L2 | 54 | 40 | 71 |
| FLA3W3R3HD2L5 | FLA3W3R3HD2L5 | 38 | 80 | 111 |
| FLA3W3R4HD2L2 | FLA3W3R4HD2L2 | 39 | 40 | 71 |
| FLA3W3R5HD1L5 | FLA3W3R5HD1L5 | 24 | 80 | 111 |
| FLA4W4R1HD4L5 | FLA4W4R1HD4L5 | 76 | 80 | 111 |
| FLA4W4R2HD3L5 | FLA4W4R2HD3L5 | 54 | 80 | 111 |
| FLA4W4R3HD3L2 | FLA4W4R3HD3L2 | 54 | 40 | 71 |
| FLA4W4R4HD2L5 | FLA4W4R4HD2L5 | 39 | 80 | 111 |
| FLA5W5R1HD4L6 | FLA5W5R1HD4L6 | 76 | 160 | 191 |
| FLA5W5R2HD4L5 | FLA5W5R2HD4L5 | 76 | 80 | 111 |
| FLA5W5R3HD3L5 | FLA5W5R3HD3L5 | 54 | 80 | 111 |
| FLA5W5R4HD3L2 | FLA5W5R4HD3L2 | 54 | 40 | 71 |
| FLA6W6R1Hd5L5 | FLA6W6R1Hd5L5 | 98 | 80 | 111 |
| FLA6W6R2Hd4L6 | FLA6W6R2Hd4L6 | 68 | 160 | 191 |
| FLA6W6R3Hd4L5 | FLA6W6R3Hd4L5 | 68 | 80 | 111 |
| FLA6W6R4Hd3L5 | FLA6W6R4Hd3L5 | 46 | 80 | 111 |
| FLA7W7R1Hd5L6 | FLA7W7R1Hd5L6 | 98 | 160 | 191 |
| FLA7W7R2Hd5L5 | FLA7W7R2Hd5L5 | 98 | 80 | 111 |
| FLA7W7R3Hd4L6 | FLA7W7R3Hd4L6 | 68 | 160 | 191 |
| FLA7W7R4Hd4L5 | FLA7W7R4Hd4L5 | 68 | 80 | 111 |
| FLA8W8R2Hd5L6 | FLA8W8R2Hd5L6 | 98 | 160 | 191 |
| FLA8W8R3Hd5L5 | FLA8W8R3Hd5L5 | 98 | 80 | 111 |
| FLA8W8R4Hd4L6 | FLA8W8R4Hd4L6 | 68 | 160 | 191 |
| FLA9W9R4Hd5L5 | FLA9W9R4Hd5L5 | 98 | 80 | 111 |
| FLA9W9R3Hd5L6 | FLA9W9R3Hd5L6 | 98 | 160 | 191 |

| PEAK kW | CONTINOUS kW | PERFORMANCE TABLE- LOW VOLTAGE BLDC MOTORS 42-55 VDC | | | | | CONTINOUS CURRENT | PEAK CURRENT [20 SEC.] |
|---|---|---|---|---|---|---|---|---|
| | | | | | | | RMS [A] | RMS [A] |
| 48 | 24 | X | X | FLA9W9R3Hd5L6 | FLA9W9R4Hd5L5 | | 480 | 960 |
| 24 | 12 | X | FLA8W8R2Hd5L6 | FLA8W8R3Hd5L5 | FLA8W8R4Hd4L6 | | 240 | 480 |
| 12 | 6 | FLA7W7R1Hd5L6 | FLA7W7R2Hd5L5 | FLA7W7R3Hd4L6 | FLA7W7R4Hd4L5 | | 120 | 240 |
| 6 | 3 | FLA6W6R1Hd5L5 | FLA6W6R2Hd4L6 | FLA6W6R3Hd4L5 | FLA6W6R4Hd3L5 | | 60 | 120 |
| 3 | 1.5 | FLA5W5R1HD4L6 | FLA5W5R2HD4L5 | FLA5W5R3HD3L5 | FLA5W5R4HD3L2 | | 30 | 60 |
| 1.5 | 0.75 | FLA4W4R1HD4L5 | FLA4W4R2HD3L5 | FLA4W4R3HD3L2 | FLA4W4R4HD2L5 | | 15 | 30 |
| 0.8 | 0.4 | FLA2W2R1HD3L5 | FLA3W3R2HD3L2 | FLA3W3R3HD2L5 | FLA3W3R4HD2L2 | FLA3W3R5HD1L5 | 8 | 16 |
| 0.4 | 0.2 | FLA2W2R1HD3L2 | FLA2W2R2HD2L5 | FLA2W2R3HD2L2 | FLA2W2R4HD1L5 | FLA2W2R5HD1L3 | 4 | 8 |
| 0.2 | 0.1 | FLA1W1R1HD2L5 | FLA1W1R2HD2L2 | FLA1W1R3HD1L5 | FLA1W1R4HD1L4 | FLA1W1R5HD1L1 | 2 | 4 |
| | **Base speed -KRPM** | 3.75 | 7.5 | 15 | 30 | 60 | **MIN OPERATING VOLTAGE IS 42 VDC. IT CAN BE ADJUSTED PER CUSTOMER NEEDS.** | |
| | **KE [V/KRPM]** | 11.2 | 5.6 | 2.8 | 1.4 | 0.7 | | |
| | **KT [mN.m/A.peak]** | 88 | 44 | 22 | 11 | 5.3 | | |
| | **NUMBER F POLES** | [4 or 8] | [4 or 8] | [4,8] | [2 or 4] | 2 | | |

| PEAK kW | CONTINOUS kW | PERFORMANCE TABLE -HIGH VOLTAGE BLDC MOTORS 330-450 VDC | | | | | CONTINOUS CURRENT | PEAK CURRENT [20 SEC.] |
|---|---|---|---|---|---|---|---|---|
| | | | | | | | RMS [A] | RMS [A] |
| 48 | 24 | X | X | FHA9W9R3Hd5L6 | FHA9W9R4Hd5L5 | | 480 | 960 |
| 24 | 12 | X | FHA8W8R2Hd5L6 | FHA8W8R3Hd5L5 | FHA8W8R4Hd4L6 | | 240 | 480 |
| 12 | 6 | FHA7W7R1Hd5L6 | FHA7W7R2Hd5L5 | FHA7W7R3Hd4L6 | FHA7W7R4Hd4L5 | | 120 | 240 |
| 6 | 3 | FHA6W6R1Hd5L5 | FHA6W6R2Hd4L6 | FHA6W6R3Hd4L5 | FHA6W6R4Hd3L5 | | 60 | 120 |
| 3 | 1.5 | FHA5W5R1HD4L6 | FHA5W5R2HD4L5 | FHA5W5R3HD3L5 | FHA5W5R4HD3L2 | | 30 | 60 |
| 1.5 | 0.75 | FHA4W4R1HD4L5 | FHA4W4R2HD3L5 | FHA4W4R3HD3L2 | FHA4W4R4HD2L5 | | 15 | 30 |
| 0.8 | 0.4 | FHA2W2R1HD3L5 | FHA3W3R2HD3L2 | FHA3W3R3HD2L5 | FHA3W3R4HD2L2 | HA3W3R5HD1L5 | 8 | 16 |
| 0.4 | 0.2 | FHA2W2R1HD3L2 | FHA2W2R2HD2L5 | FHA2W2R3HD2L2 | FHA2W2R4HD1L5 | FHA2W2R5HD1L3 | 4 | 8 |
| 0.2 | 0.1 | FHA1W1R1HD2L5 | FHA1W1R2HD2L2 | FHA1W1R3HD1L5 | FHA1W1R4HD1L4 | FHA1W1R5HD1L1 | 2 | 4 |
| | **Base speed -KRPM** | 3.75 | 7.5 | 15 | 30 | 60 | **MIN OPERATING VOLTAGE IS 330 VDC IT CAN BE ADJUSTED PER CUSTOMER NEEDS.** | |
| | **KE [V/KRPM]** | 11.2 | 5.6 | 2.8 | 1.4 | 0.7 | | |
| | **KT [mN.m/A.peak]** | 88 | 44 | 22 | 11 | 5.3 | | |
| | **NUMBER F POLES** | [4 or 8] | [4 or 8] | [4,8] | [2 or 4] | 2 | | |

**KEY FEATURES:**

- BEARING ISO 492 CLASS 2,4,AND 6
- INSULATION NEMA CLASSES: B, H, 220 [C]
- HIGH STRENGTH SHAFT –PASSIVATED
- ANNEALED M19 LAMINATION
- CORROSION RESISTANCE ACCESSORIES
- CHEMICAL RESISTANCE SEALS
- ROHS BOM COMPLIANCY
- HARMONIZED AND SCALABLE DESIGN
- PIGTAIL ASSY WITH TERMINAL LUG
- NTC / RTD FOR THERMAL PROTECTION
- VIBRATION CLASS V2-V5 PER CUSTOMER NEED

# BLDC MOTORS

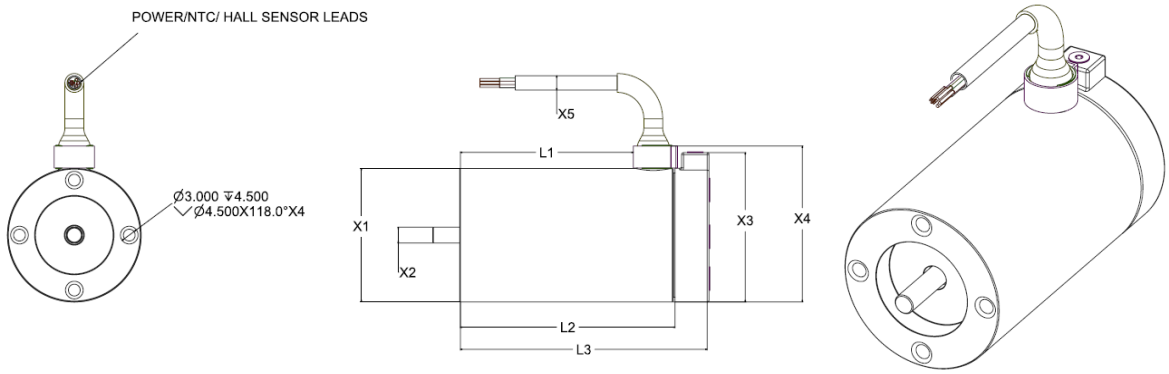


| PART NUMBER DESCRIPTION | | | | | | |
|---|---|---|---|---|---|---|
| **VOLTAGE** | **CURRENT RATING** | **POWER** | **MAX SPEED** | **MAX OPERATING TEMEPRATURE** | **OUTER DIAMETER** | **LENGTH** |
| **VDC** | **[A-RMS]** | **kW** | **KRPM** | **[C]** | **[mm]** | **[mm]** |
| H=330-450 VDC, L=42-72 VDC | A1=2, A2=4,A3=8, A4=15, A5=30,A6=60,A7=120,A8=240, A9=480 | W1=0.1,W2=.2,W3=.4,W4=0.75,W5=1.5,W6=3,W7=6,W8=12,W9=24 | R1=3.75,R2=7.5,R3=15,R4=30,R5=60 | B=135 , C=150,H=180,G=200, X=TBD | D1=30, D2=45, D3=60,d3=68,D4=82,d4=90,D5=104,d5=112 | L1=75, L2=80,L3=104, L4=109, L5=120,L6=201 |

| | | | DIMESIONS | | | | | | | SENSORLESS | INCLUDING HALL SENSOR ASSY |
|---|---|---|---|---|---|---|---|---|---|---|---|
| | | | x1 [mm] | x2 [mm] | x3 [mm] | x4[mm] | x5[mm] | x5 [mm] | L1 [mm] | L2[mm] | L3 [mm] |
| | MODEL NUMBERS | | X | X | X | X | L SERIES | H SERIES | X | X | X |
| CONDUCTION AND CONVECTION COOLING | HA1W1R1HD2L5 | LA1W1R1HD2L5 | 45 | 4 | 48 | 50 | 5 | 3.6 | 101 | 111 | 120 |
| | HA1W1R2HD2L2 | LA1W1R2HD2L2 | 45 | 4 | 48 | 50 | 5 | 3.6 | 61 | 71 | 80 |
| | HA1W1R3HD1L5 | LA1W1R3HD1L5 | 30 | 4 | 33 | 35 | 5 | 3.6 | 101 | 111 | 120 |
| | HA1W1R4HD1L4 | LA1W1R4HD1L4 | 30 | 4 | 33 | 35 | 5 | 3.6 | 90 | 100 | 109 |
| | HA1W1R5HD1L1 | LA1W1R5HD1L1 | 30 | 4 | 33 | 35 | 5 | 3.6 | 56 | 66 | 75 |
| | HA2W2R1HD3L2 | LA2W2R1HD3L2 | 60 | 4 | 63 | 65 | 5.5 | 4 | 61 | 71 | 80 |
| | HA2W2R2HD2L5 | LA2W2R2HD2L5 | 45 | 4 | 48 | 50 | 5.5 | 4 | 101 | 111 | 120 |
| | HA2W2R3HD2L2 | LA2W2R3HD2L2 | 45 | 4 | 48 | 50 | 5.5 | 4 | 61 | 71 | 80 |
| | HA2W2R4HD1L5 | LA2W2R4HD1L5 | 30 | 4 | 33 | 35 | 6.5 | 4.5 | 101 | 111 | 120 |
| | HA2W2R5HD1L3 | LA2W2R5HD1L3 | 30 | 4 | 33 | 35 | 5.5 | 4 | 85 | 95 | 104 |
| | HA2W2R1HD3L5 | LA2W2R1HD3L5 | 60 | 4 | 63 | 65 | 6.5 | 4.5 | 101 | 111 | 120 |
| | HA3W3R2HD3L2 | LA3W3R2HD3L2 | 60 | 4 | 63 | 65 | 6.5 | 4.5 | 61 | 71 | 80 |
| | HA3W3R3HD2L5 | LA3W3R3HD2L5 | 44 | 4 | 47 | 49 | 6.5 | 4.5 | 101 | 111 | 120 |
| | HA3W3R4HD2L2 | LA3W3R4HD2L2 | 45 | 4 | 48 | 50 | 6.5 | 4.5 | 61 | 71 | 80 |
| | HA3W3R5HD1L5 | LA3W3R5HD1L5 | 30 | 4 | 33 | 35 | 8 | 5 | 101 | 111 | 120 |
| | HA4W4R1HD4L5 | LA4W4R1HD4L5 | 82 | 4 | 85 | 87 | 8 | 5 | 101 | 111 | 120 |
| | HA4W4R2HD3L5 | LA4W4R2HD3L5 | 60 | 4 | 63 | 65 | 8 | 5 | 101 | 111 | 120 |
| | HA4W4R3HD3L2 | LA4W4R3HD3L2 | 60 | 4 | 63 | 65 | 8 | 5 | 61 | 71 | 80 |
| | HA4W4R4HD2L5 | LA4W4R4HD2L5 | 45 | 4 | 48 | 50 | 8 | 5 | 101 | 111 | 120 |
| | HA5W5R1HD4L6 | LA5W5R1HD4L6 | 82 | 4 | 85 | 87 | 10 | 5.5 | 181 | 191 | 200 |
| | HA5W5R2HD4L5 | LA5W5R2HD4L5 | 82 | 4 | 85 | 87 | 10 | 5.5 | 101 | 111 | 120 |
| | HA5W5R3HD3L5 | LA5W5R3HD3L5 | 60 | 4 | 63 | 65 | 10 | 5.5 | 101 | 111 | 120 |
| | HA5W5R4HD3L2 | LA5W5R4HD3L2 | 60 | 4 | 63 | 65 | 10 | 5.5 | 61 | 71 | 80 |
| WATER JACKET | HA6W6R1Hd5L5 | LA6W6R1Hd5L5 | 112 | 4 | 107 | 109 | 13 | 6.5 | 101 | 111 | 120 |
| | HA6W6R2Hd4L6 | LA6W6R2Hd4L6 | 90 | 4 | 85 | 87 | 13 | 6.5 | 181 | 191 | 200 |
| | HA6W6R3Hd4L5 | LA6W6R3Hd4L5 | 90 | 4 | 85 | 87 | 13 | 6.5 | 101 | 111 | 120 |
| | HA6W6R4Hd3L5 | LA6W6R4Hd3L5 | 68 | 4 | 63 | 65 | 13 | 6.5 | 101 | 111 | 120 |
| | HA7W7R1Hd5L6 | LA7W7R1Hd5L6 | 112 | 4 | 107 | 109 | 17 | 8 | 181 | 191 | 200 |
| | HA7W7R2Hd5L5 | LA7W7R2Hd5L5 | 112 | 4 | 107 | 109 | 17 | 8 | 101 | 111 | 120 |
| | HA7W7R3Hd4L6 | LA7W7R3Hd4L6 | 90 | 4 | 85 | 87 | 17 | 8 | 181 | 191 | 200 |
| | HA7W7R4Hd4L5 | LA7W7R4Hd4L5 | 90 | 4 | 85 | 87 | 17 | 8 | 101 | 111 | 120 |
| | HA8W8R2Hd5L6 | LA8W8R2Hd5L6 | 112 | 4 | 107 | 109 | 22 | 10 | 181 | 191 | 200 |
| | HA8W8R3Hd5L5 | LA8W8R3Hd5L5 | 112 | 4 | 107 | 109 | 22 | 10 | 101 | 111 | 120 |
| | HA8W8R4Hd4L6 | LA8W8R4Hd4L6 | 90 | 4 | 85 | 87 | 22 | 10 | 181 | 191 | 200 |
| | HA9W9R4Hd5L5 | LA9W9R4Hd5L5 | 112 | 4 | 107 | 109 | 22 | 10 | 101 | 111 | 120 |
| | HA9W9R3Hd5L6 | LA9W9R3Hd5L6 | 112 | 4 | 107 | 109 | 31 | 13 | 181 | 191 | 200 |

| PEAK kW | CONTINOUS kW | PERFORMANCE TABLE- LOW VOLTAGE BLDC MOTORS | | | | | CONTINOUS CURRENT | PEAK CURRENT [20 SEC.] |
|---|---|---|---|---|---|---|---|---|
| | | | | | | | RMS [A] | RMS [A] |
| 48 | 24 | X | X | LA9W9R3Hd5L6 | LA9W9R4Hd5L5 | | 480 | 960 |
| 24 | 12 | X | LA8W8R2Hd5L6 | LA8W8R3Hd5L5 | LA8W8R4Hd4L6 | | 240 | 480 |
| 12 | 6 | LA7W7R1Hd5L6 | LA7W7R2Hd5L5 | LA7W7R3Hd4L6 | LA7W7R4Hd4L5 | | 120 | 240 |
| 6 | 3 | LA6W6R1Hd5L5 | LA6W6R2Hd4L6 | LA6W6R3Hd4L5 | LA6W6R4Hd3L5 | | 60 | 120 |
| 3 | 1.5 | LA5W5R1HD4L6 | LA5W5R2HD4L5 | LA5W5R3HD3L5 | LA5W5R4HD3L2 | | 30 | 60 |
| 1.5 | 0.75 | LA4W4R1HD4L5 | LA4W4R2HD3L5 | LA4W4R3HD3L2 | LA4W4R4HD2L5 | | 15 | 30 |
| 0.8 | 0.4 | LA2W2R1HD3L5 | LA3W3R2HD3L2 | LA3W3R3HD2L5 | LA3W3R4HD2L2 | LA3W3R5HD1L5 | 8 | 16 |
| 0.4 | 0.2 | LA2W2R1HD3L2 | LA2W2R2HD2L5 | LA2W2R3HD2L2 | LA2W2R4HD1L5 | LA2W2R5HD1L3 | 4 | 8 |
| 0.2 | 0.1 | LA1W1R1HD2L5 | LA1W1R2HD2L2 | LA1W1R3HD1L5 | LA1W1R4HD1L4 | LA1W1R5HD1L1 | 2 | 4 |
| | Base speed -KRPM | 3.75 | 7.5 | 15 | 30 | 60 | MIN OPERATING VOLTAGE IS 42 VDC. IT CAN BE ADJUSTED PER CUSTOMER NEEDS. | |
| | KE [V/KRPM] | 11.2 | 5.6 | 2.8 | 1.4 | 0.7 | | |
| | KT [mN.m/A.peak] | 88 | 44 | 22 | 11 | 5.3 | | |
| | NUMBER F POLES | [4 or 8] | [4 or 8] | [4,8] | [2 or 4] | 2 | | |

| PEAK kW | CONTINOUS kW | PERFORMANCE TABLE -HIGH VOLTAGE BLDC MOTORS | | | | | CONTINOUS CURRENT | PEAK CURRENT [20 SEC.] |
|---|---|---|---|---|---|---|---|---|
| | | | | | | | RMS [A] | RMS [A] |
| 48 | 24 | X | X | HA9W9R3Hd5L6 | HA9W9R4Hd5L5 | | 480 | 960 |
| 24 | 12 | X | HA8W8R2Hd5L6 | HA8W8R3Hd5L5 | HA8W8R4Hd4L6 | | 240 | 480 |
| 12 | 6 | HA7W7R1Hd5L6 | HA7W7R2Hd5L5 | HA7W7R3Hd4L6 | HA7W7R4Hd4L5 | | 120 | 240 |
| 6 | 3 | HA6W6R1Hd5L5 | HA6W6R2Hd4L6 | HA6W6R3Hd4L5 | HA6W6R4Hd3L5 | | 60 | 120 |
| 3 | 1.5 | HA5W5R1HD4L6 | HA5W5R2HD4L5 | HA5W5R3HD3L5 | HA5W5R4HD3L2 | | 30 | 60 |
| 1.5 | 0.75 | HA4W4R1HD4L5 | HA4W4R2HD3L5 | HA4W4R3HD3L2 | HA4W4R4HD2L5 | | 15 | 30 |
| 0.8 | 0.4 | HA2W2R1HD3L5 | HA3W3R2HD3L2 | HA3W3R3HD2L5 | HA3W3R4HD2L2 | HA3W3R5HD1L5 | 8 | 16 |
| 0.4 | 0.2 | HA2W2R1HD3L2 | HA2W2R2HD2L5 | HA2W2R3HD2L2 | HA2W2R4HD1L5 | HA2W2R5HD1L3 | 4 | 8 |
| 0.2 | 0.1 | HA1W1R1HD2L5 | HA1W1R2HD2L2 | HA1W1R3HD1L5 | HA1W1R4HD1L4 | HA1W1R5HD1L1 | 2 | 4 |
| | **Base speed -KRPM** | 3.75 | 7.5 | 15 | 30 | 60 | **MIN OPERATING VOLTAGE IS 330 VDC IT CAN BE ADJUSTED PER CUSTOMER NEEDS.** | |
| | **KE [V/KRPM]** | 11.2 | 5.6 | 2.8 | 1.4 | 0.7 | | |
| | **KT [mN.m/A.peak]** | 88 | 44 | 22 | 11 | 5.3 | | |
| | **NUMBER F POLES** | [4 or 8] | [4 or 8] | [4,8] | [2 or 4] | 2 | | |

**KEY FEATURES:**

- BEARING ISO 492 CLASS 2,4,AND 6
- SEALING PER ISO 60529 UP TO IP6K9K
- INSULATION NEMA CLASSES: B, H, 220 [C]
- AL HOUSING –ANODIZED
- HIGH STRENGTH SHAFT –PASSIVATED
- ANNEALED M19 LAMINATION
- CORROSION RESISTANCE ACCESSORIES
- CHEMICAL RESISTANCE SEALS
- ROHS BOM COMPLIANCY
- HARMONIZED AND SCALABLE DESIGN
- CUSTOM TERMINAL ASSY [ PIGTAIL/TERMINAL ASSEMBLY]
- NTC / RTD FOR THERMAL PROTECTION
- VIBRATION CLASS V2-V5 PER CUSTOMER NEED
- COOLING SYSTEM NATURALLY COOLED/ WATER JACKET
- CUSTOM FLANGE AND SHAFT INTERFACES

# VR RESOLVERS

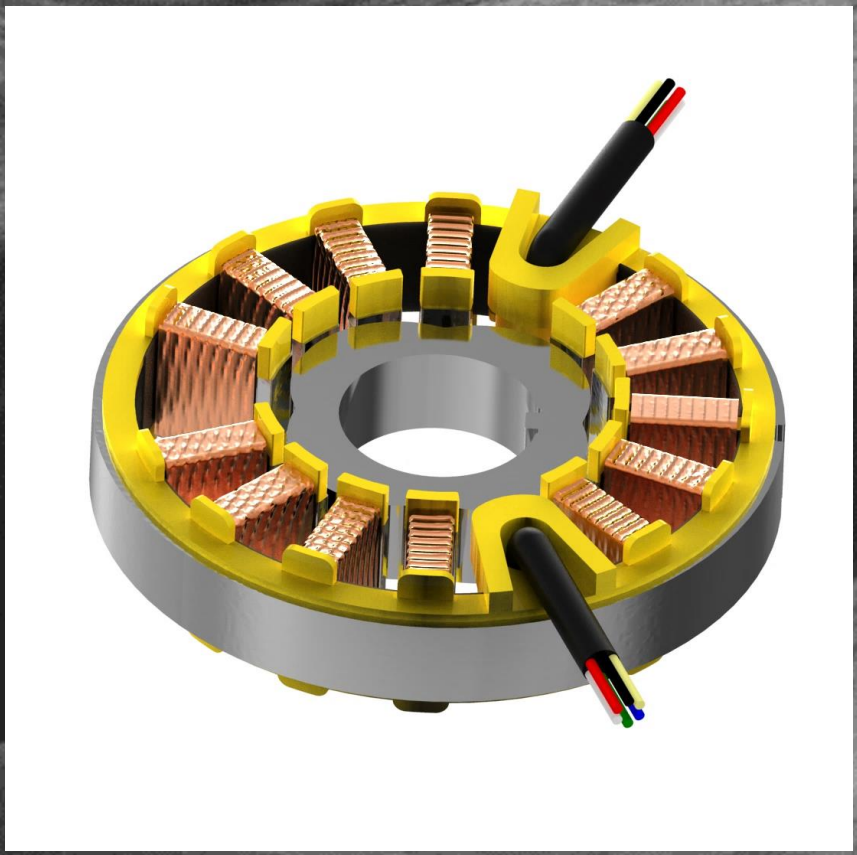

SCnewton's VR RESOLVER portfolio covers variety models and sizes; As a result of moving toward a cleaner and more environmentally friendly future, SCnewton offers a new class of VR resolvers equipped with dual terminal selections for critical powertrain applications. We offer 4x, 5x, and 6x resolvers, each in six different standard frame sizes providing wide range of selection with configuratable input and output impedences. The ref. ratio of resolvers are 0.2, it would be adjustable per customization. Customization of dimensions and performance is available.

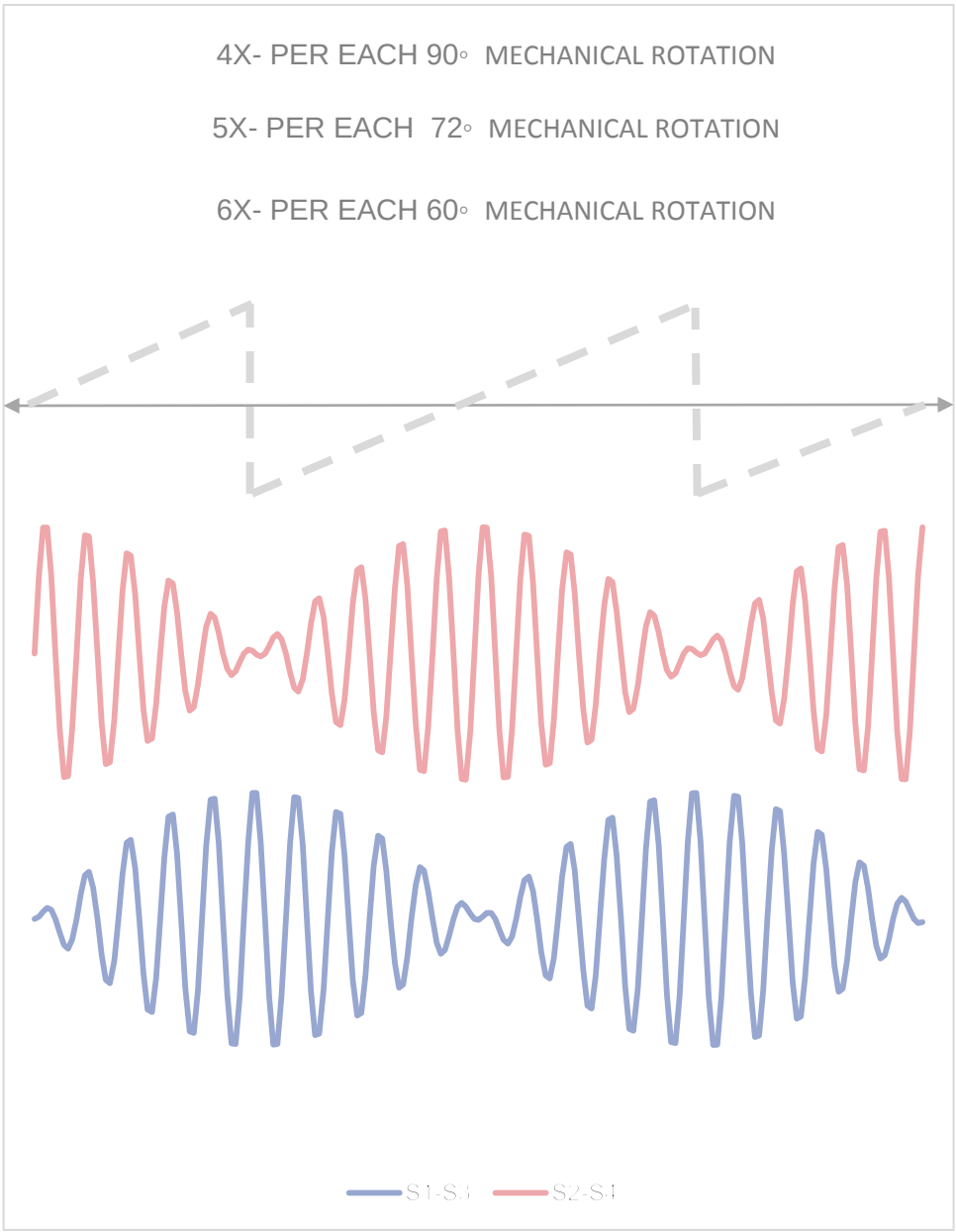


EXCITATION VOLTAGE UPPER LIMIT: $15 \times \sin(2\pi \times 15000 \times time)$

EXCITATION VOLTAGE LOWER LIMIT: $10 \times \sin(2\pi \times 10000 \times time)$

MAX ROTOR SPEED LIMIT: 30,000 RPM

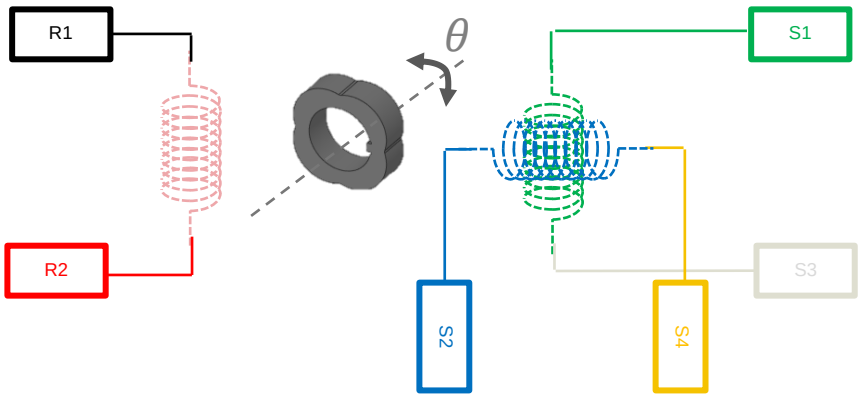


VR RESOLVER OUTPUT SIGNAL, INPUT: R1,2, COS: S1,3, SIN: S2,4

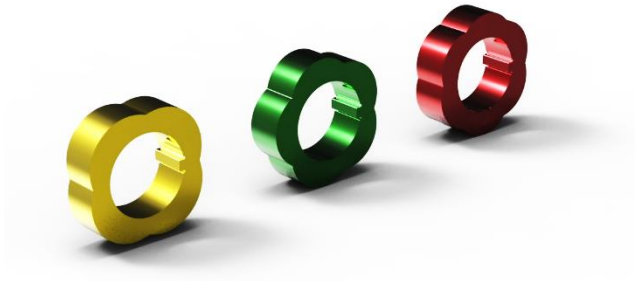

RESOLVER LOPES , 4X, 5X, 6X

| SUMMARY SHEET | |
|---|---|
| Application | ROTOR POSITION UP TO 30KRPM, MAX ERROR 60 ARC.MIN |
| Models | 4x,5x,6x |
| Excitation | 0-15V, 10-15kHz |
| Ratio | 0.2 |
| Available sizeS | OD: 25 mm to 150 mm<br>ID: 6 mm to 60 mm<br>Length= 14 mm |
| Redundancy | Inherit |
| Terminal type | Pigtail |

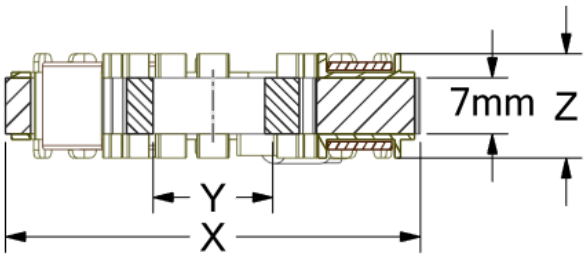


## 4X- SIZE A

| PART# | X=OUTER DIAMETER [mm] | Y=INNER DIAMETER [mm] | Z=MAX STACK LENGTH [mm] | NUMBER OF LOPES | TOTAL LENGTH [mm] | RATIO | INPUT IMPEDENCE [OHM] | SIN/COS IMPEDENCE [OHM] | ACCURACY [ARC/MIN] |
|---|---|---|---|---|---|---|---|---|---|
| R-X-Y-Z-4 | [25 TO 37] | 6 | 7 | 4 | 14 | 0.2 | 100-200 | 400-800 | 60 |

## 4X- SIZE B

| PART# | X=OUTER DIAMETER [mm] | Y=INNER DIAMETER [mm] | Z=MAX STACK LENGTH [mm] | NUMBER OF LOPES | TOTAL LENGTH [mm] | RATIO | INPUT IMPEDENCE [OHM] | SIN/COS IMPEDENCE [OHM] | ACCURACY [ARC/MIN] |
|---|---|---|---|---|---|---|---|---|---|
| R-X-Y-Z-4 | [37 TO 52] | 12 | 7 | 4 | 14 | 0.2 | 100-200 | 400-800 | 60 |

## 4X-SIZE C

| PART# | X=OUTER DIAMETER [mm] | Y=INNER DIAMETER [mm] | Z=MAX STACK LENGTH [mm] | NUMBER OF LOPES | TOTAL LENGTH [mm] | RATIO | INPUT IMPEDENCE [OHM] | SIN/COS IMPEDENCE [OHM] | ACCURACY [ARC/MIN] |
|---|---|---|---|---|---|---|---|---|---|
| R-X-Y-Z-4 | [52 TO 75] | 20 | 7 | 4 | 14 | 0.2 | 100-200 | 400-800 | 60 |

## 4X-SIZE D

| PART# | X=OUTER DIAMETER [mm] | Y=INNER DIAMETER [mm] | Z=MAX STACK LENGTH [mm] | NUMBER OF LOPES | TOTAL LENGTH [mm] | RATIO | INPUT IMPEDENCE [OHM] | SIN/COS IMPEDENCE [OHM] | ACCURACY [ARC/MIN] |
|---|---|---|---|---|---|---|---|---|---|
| R-X-Y-Z-4 | [75 TO 101] | 30 | 7 | 4 | 14 | 0.2 | 100-200 | 400-800 | 60 |

## 4X-SIZE E

| PART# | X=OUTER DIAMETER [mm] | Y=INNER DIAMETER [mm] | Z=MAX STACK LENGTH [mm] | NUMBER OF LOPES | TOTAL LENGTH [mm] | RATIO | INPUT IMPEDENCE [OHM] | SIN/COS IMPEDENCE [OHM] | ACCURACY [ARC/MIN] |
|---|---|---|---|---|---|---|---|---|---|
| R-X-Y-Z-4 | [101 TO 132] | 44 | 7 | 4 | 14 | 0.2 | 100-200 | 400-800 | 60 |

## 4X-SIZE F

| PART# | X=OUTER DIAMETER [mm] | Y=INNER DIAMETER [mm] | Z=MAX STACK LENGTH [mm] | NUMBER OF LOPES | TOTAL LENGTH [mm] | RATIO | INPUT IMPEDENCE [OHM] | SIN/COS IMPEDENCE [OHM] | ACCURACY [ARC/MIN] |
|---|---|---|---|---|---|---|---|---|---|
| R-X-Y-Z-4 | [132 TO 150] | 60 | 7 | 4 | 14 | 0.2 | 100-200 | 400-800 | 60 |
| | | | | | | | | | |

## 5X- SIZE B

| PART# | X=OUTER DIAMETER [mm] | Y=INNER DIAMETER [mm] | Z=MAX STACK LENGTH [mm] | NUMBER OF LOPES | TOTAL LENGTH [mm] | RATIO | INPUT IMPEDENCE [OHM] | SIN/COS IMPEDENCE [OHM] | ACCURACY [ARC/MIN] |
|---|---|---|---|---|---|---|---|---|---|
| R-X-Y-Z-5 | [37 TO 52] | 12 | 7 | 5 | 14 | 0.2 | 100-200 | 400-800 | 60 |

## 5X-SIZE C

| PART# | X=OUTER DIAMETER [mm] | Y=INNER DIAMETER [mm] | Z=MAX STACK LENGTH [mm] | NUMBER OF LOPES | TOTAL LENGTH [mm] | RATIO | INPUT IMPEDENCE [OHM] | SIN/COS IMPEDENCE [OHM] | ACCURACY [ARC/MIN] |
|---|---|---|---|---|---|---|---|---|---|
| R-X-Y-Z-5 | [52 TO 75] | 20 | 7 | 5 | 14 | 0.2 | 100-200 | 400-800 | 60 |

## 5X-SIZE D

| PART# | X=OUTER DIAMETER [mm] | Y=INNER DIAMETER [mm] | Z=MAX STACK LENGTH [mm] | NUMBER OF LOPES | TOTAL LENGTH [mm] | RATIO | INPUT IMPEDENCE [OHM] | SIN/COS IMPEDENCE [OHM] | ACCURACY [ARC/MIN] |
|---|---|---|---|---|---|---|---|---|---|
| R-X-Y-Z-5 | [75 TO 101] | 30 | 7 | 5 | 14 | 0.2 | 100-200 | 400-800 | 60 |

## 5X-SIZE E

| PART# | X=OUTER DIAMETER [mm] | Y=INNER DIAMETER [mm] | Z=MAX STACK LENGTH [mm] | NUMBER OF LOPES | TOTAL LENGTH [mm] | RATIO | INPUT IMPEDENCE [OHM] | SIN/COS IMPEDENCE [OHM] | ACCURACY [ARC/MIN] |
|---|---|---|---|---|---|---|---|---|---|
| R-X-Y-Z-5 | [101 TO 132] | 44 | 7 | 5 | 14 | 0.2 | 100-200 | 400-800 | 60 |

## 5X-SIZE F

| PART# | X=OUTER DIAMETER [mm] | Y=INNER DIAMETER [mm] | Z=MAX STACK LENGTH [mm] | NUMBER OF LOPES | TOTAL LENGTH [mm] | RATIO | INPUT IMPEDENCE [OHM] | SIN/COS IMPEDENCE [OHM] | ACCURACY [ARC/MIN] |
|---|---|---|---|---|---|---|---|---|---|
| R-X-Y-Z-5 | [132 TO 150] | 60 | 7 | 5 | 14 | 0.2 | 100-200 | 400-800 | 60 |
| | | | | | | | | | |

## 6X- SIZE B

| PART# | X=OUTER DIAMETER [mm] | Y=INNER DIAMETER [mm] | Z=MAX STACK LENGTH [mm] | NUMBER OF LOPES | TOTAL LENGTH [mm] | RATIO | INPUT IMPEDENCE [OHM] | SIN/COS IMPEDENCE [OHM] | ACCURACY [ARC/MIN] |
|---|---|---|---|---|---|---|---|---|---|
| R-X-Y-Z-6 | [37 TO 52] | 12 | 7 | 6 | 14 | 0.2 | 100-200 | 400-800 | 60 |

## 6X-SIZE C

| PART# | X=OUTER DIAMETER [mm] | Y=INNER DIAMETER [mm] | Z=MAX STACK LENGTH [mm] | NUMBER OF LOPES | TOTAL LENGTH [mm] | RATIO | INPUT IMPEDENCE [OHM] | SIN/COS IMPEDENCE [OHM] | ACCURACY [ARC/MIN] |
|---|---|---|---|---|---|---|---|---|---|
| R-X-Y-Z-6 | [52 TO 75] | 20 | 7 | 6 | 14 | 0.2 | 100-200 | 400-800 | 60 |

## 6X-SIZE D

| PART# | X=OUTER DIAMETER [mm] | Y=INNER DIAMETER [mm] | Z=MAX STACK LENGTH [mm] | NUMBER OF LOPES | TOTAL LENGTH [mm] | RATIO | INPUT IMPEDENCE [OHM] | SIN/COS IMPEDENCE [OHM] | ACCURACY [ARC/MIN] |
|---|---|---|---|---|---|---|---|---|---|
| R-X-Y-Z-6 | [75 TO 101] | 30 | 7 | 6 | 14 | 0.2 | 100-200 | 400-800 | 60 |

## 6X-SIZE E

| PART# | X=OUTER DIAMETER [mm] | Y=INNER DIAMETER [mm] | Z=MAX STACK LENGTH [mm] | NUMBER OF LOPES | TOTAL LENGTH [mm] | RATIO | INPUT IMPEDENCE [OHM] | SIN/COS IMPEDENCE [OHM] | ACCURACY [ARC/MIN] |
|---|---|---|---|---|---|---|---|---|---|
| R-X-Y-Z-6 | [101 TO 132] | 44 | 7 | 6 | 14 | 0.2 | 100-200 | 400-800 | 60 |

## 6X-SIZE F

| PART# | X=OUTER DIAMETER [mm] | Y=INNER DIAMETER [mm] | Z=MAX STACK LENGTH [mm] | NUMBER OF LOPES | TOTAL LENGTH [mm] | RATIO | INPUT IMPEDENCE [OHM] | SIN/COS IMPEDENCE [OHM] | ACCURACY [ARC/MIN] |
|---|---|---|---|---|---|---|---|---|---|
| R-X-Y-Z-6 | [132 TO 150] | 60 | 7 | 6 | 14 | 0.2 | 100-200 | 400-800 | 60 |